Algas-SDI Making Fuel Gases Easier to Use
NG | LPG | SNG | CNG | RNG

PHOENIX VH
Direct Fired Burner

Operations & Maintenance Manual

ISO 9001 Certified

This manual covers units built after April 2022 (S/N: 3220019135)

FILE: MANUAL PN 57000 PHOENIX VH revision 9/9/2025

WARNING

Read the OPERATION MANUAL before operating this equipment.

This equipment uses LPG and Natural Gas – flammable fuels. Inherent hazards exist and a thorough understanding of the equipment is required to allow safe operation and maintenance.

Allow only a TRAINED and FULLY QUALIFIED PERSON to service this equipment.

Any time a component must be replaced, use the same type, model, etc. DO NOT SUBSTITUTE! The consequences from such actions are unpredictable and may lead to dire outcomes.

The burner is likely to have HOT surfaces. Always wear protective clothing when approaching the burner.

Algas-SDI products uses materials that contain crystalline silica. Examples of these chemicals are respirable crystalline silica from bricks, cement or other masonry products and respirable refractory ceramic fibers from insulating blankets, boards, or gaskets. Dust created by sanding, sawing, grinding, cutting and other construction activities could release crystalline silica. Crystalline silica is known to cause cancer, and health risks from the exposure to these chemicals vary depending on the frequency and length of exposure to these chemicals. To reduce the risk, limit exposure to these chemicals, work in a well-ventilated area and wear approved personal protective safety equipment for these chemicals.

Symbols and Conventions

Special symbols are used to denote hazardous or important information. You should familiarize yourself with their meaning and take special notice of the indicated information.

Please read the following explanations thoroughly.

GENERAL WARNING OR CAUTION

Indicates hazards or unsafe practices which can result in damage to the equipment or cause personal injury. Use care and follow the instructions given.

FLAMMABLE GAS HAZARD

Indicates a potential hazard which can result in severe personal injury or death. Use extreme care and follow the instructions given.

ELECTRICAL DISCONNECT REQUIRED

Indicates a potentially dangerous situation which can result in severe personal injury or death or damage to equipment. Use great care and follow the instruction given.

Table of Contents

Symbols and Conventions 3

1. INTRODUCTION 5

Product Description 5
Major Components 6
Fasteners & Tooling 7

2. INSTALLATION 8

Handling 8
Storage 8
Checklist Before Installation 9
Preparing the Burner 9
Rotate the Rear Cover (Optional) 10
Installing the Flame Supervision 11
Installing the Igniter 12
Burner Installation 12
Alloy Combustor 14
Silicon Carbide (SiC) Combustor 15
Refractory Combustor 16
Large Refractory Combustors 17
Refractory Combustor Curing Schedule 17
Refractory Combustor Holder Temperature 17
Checklist After Installation 18
Prepare for Start Up/Adjustment 18

3. OPERATION 19

Initial Setup 19
Fixed Air Systems (Air Flow) 20
Fixed Air Systems (Gas Flow) 20
On-ratio Gas Systems (Air Flow) 21
On-ratio Gas Systems (Gas Flow) 21
Manual Startup Guide 22
Manual Shutdown Guide 22

4. MAINTENANCE 23

Monthly Checklist (Optional) 23
Annual Checklist 24

5. TROUBLESHOOTING 25

Troubleshooting Procedures 25

6. SPARE PARTS 27

Spare Part List Models VH0015 – VH0040 27
Spare Part List Models VH0050 – VH0075 28
Spare Part List Models VH0100 – VH0200 29
Spare Part List Model VH0300 30
Spare Part List Model VH0500 – VH0750 31

1. INTRODUCTION

Product Description

- The Phoenix VH (Velocity Heat) burner is a direct-fired nozzle-mix burner, that utilizes ambient combustion air to supply a focused high temperature flame with flexibility of fuel options.
- The Phoenix VH burners are available with high velocity and medium velocity combustor options.
- For performance and operational parameters refer to the Phoenix VH Specification Sheets.

Figure 1.1 – Phoenix VH Burner

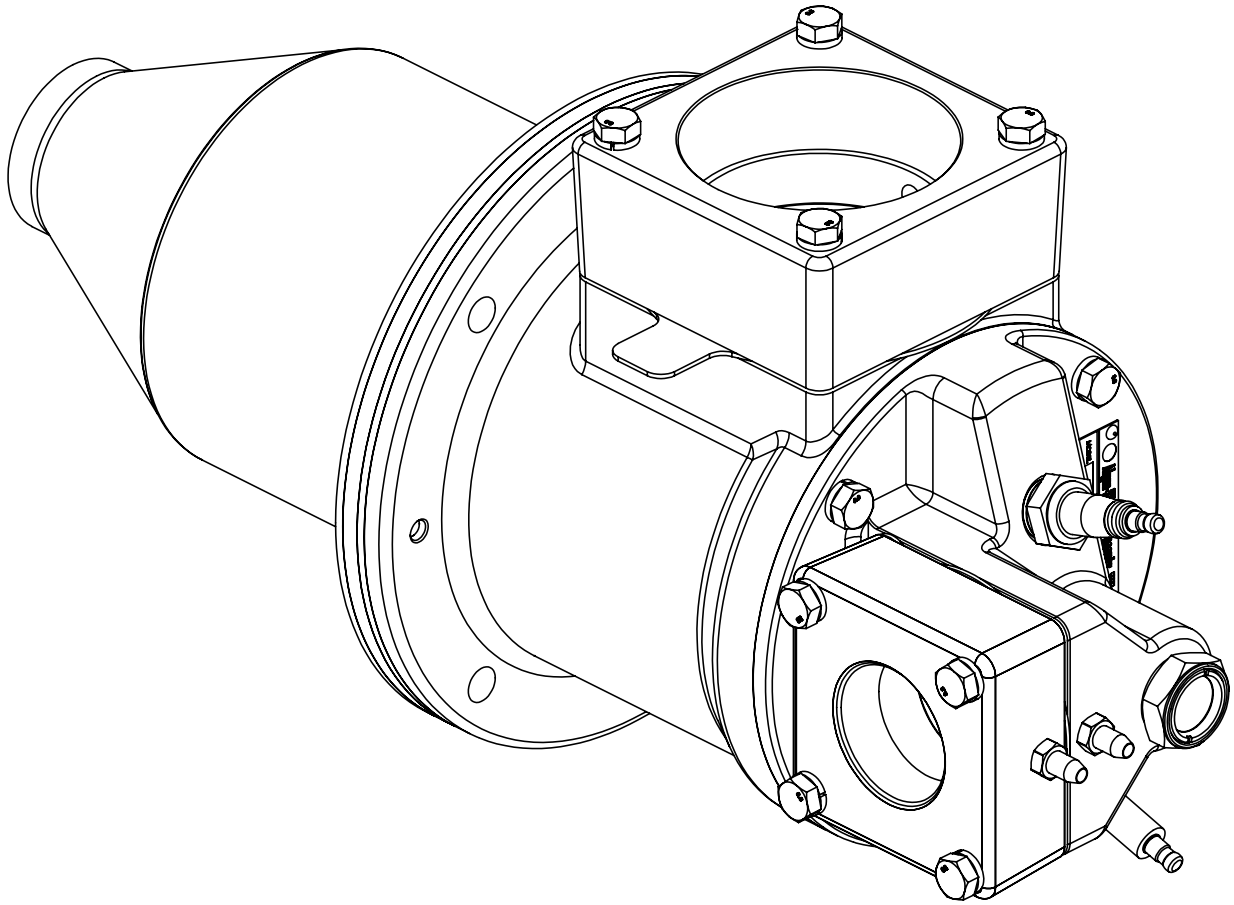

Major Components

The Phoenix VH Burners consists of the following components (Refer to Figure 1.2):

- Burner Body
- Burner Nozzle
- Burner Rear Cover
- Combustor
- Fuel Inlet Block
- Air Inlet Block
- Igniter
- Flame Supervision
- O-rings
- Orifice Plates

Utilizing a nozzle mix design, fuel enters through the center of the body while air enters around and through the inlet holes in the nozzle. Combustion takes place within the nozzle and combustor.

Figure 1.2 – Phoenix VH Major Components

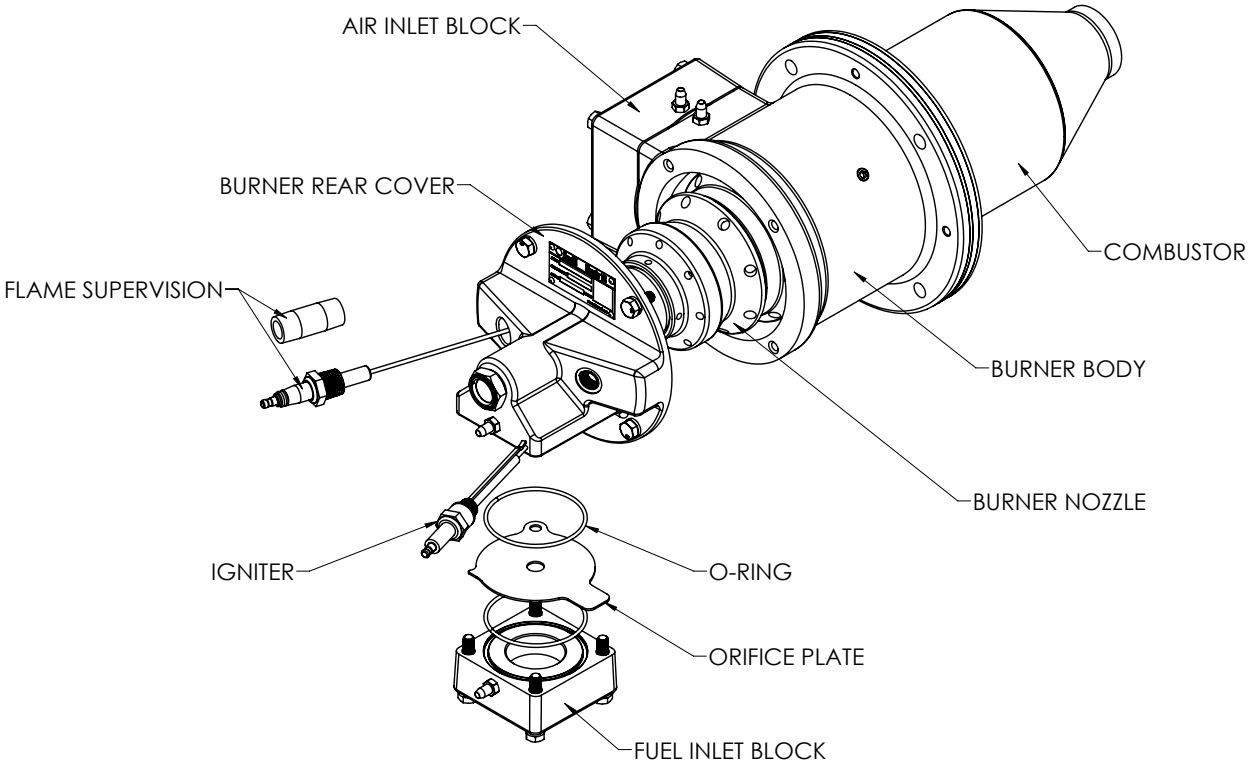

Fasteners & Tooling

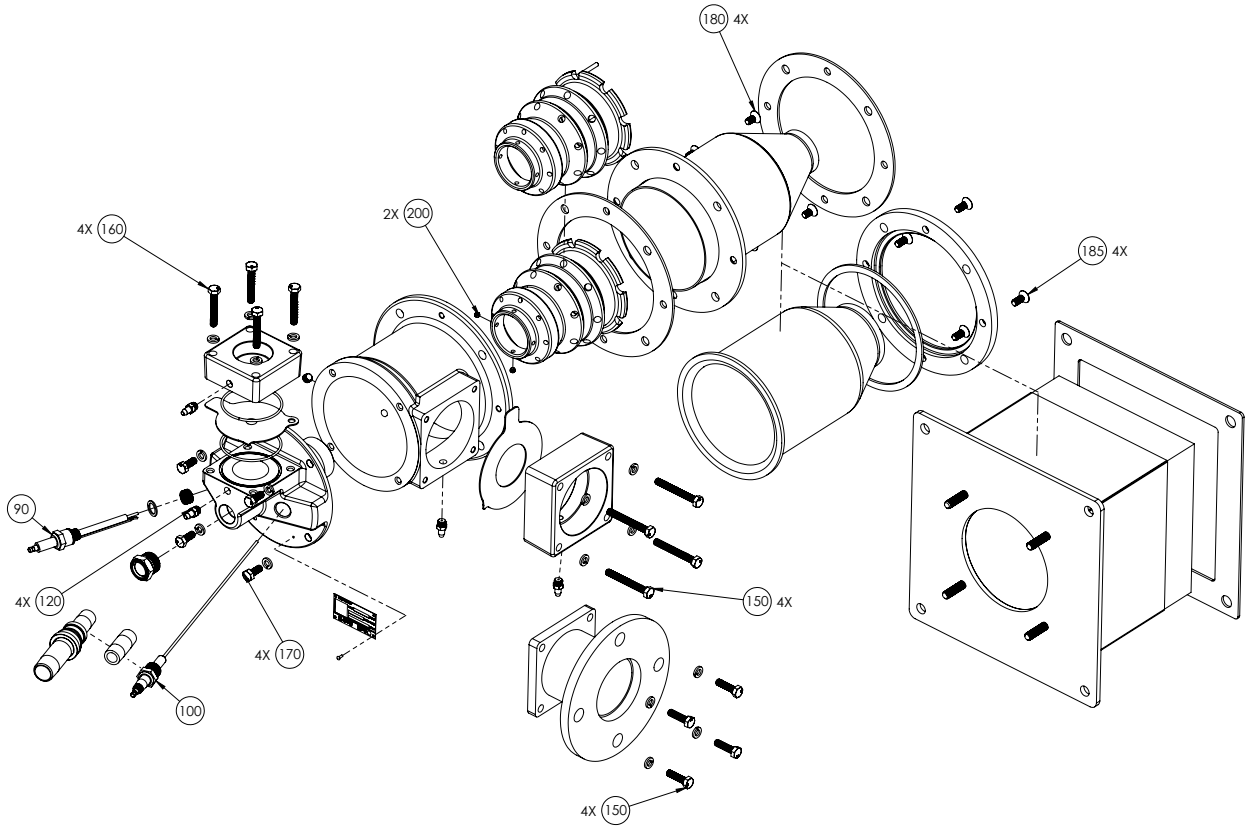

Item No	Tooling	Fastener	VH0015-0040	VH0050-0075	VH0100-0200	VH0300	VH0500-0750
90	13/16” Wrench	Ignitor					
100	7/8” Wrench	Flame Rod					
120	3/16” Flat Head Screwdriver	Pressure Tap					
150	17mm Wrench	Hex Head Screw					M10
150	13mm Wrench	Hex Head Screw	M8				
160		Hex Head Screw	M8				
170		Hex Head Screw	M8				
180	5mm Hex Key	Flat Head Screw	M8				
185							
200	2 - 3mm Hex Key	Set Screw	M4	M6			

2. INSTALLATION

Handling

- Verify that the area is clean.
- Protect the burner from weather, dirt, and moisture.
- Protect burner from excessive temperature and humidity.
- Take care not to drop or damage the burner.

Storage

- Verify that the burner is clean and free of damage.
- Store burner in a cool, clean, dry room.
- After ensuring that everything is present and in good condition, keep the burner in the original package if possible.

Checklist Before Installation

Intake

- To admit fresh combustion air from outdoors, provide an opening in the room of at least one square inch per 4,000 BTU/hr. In the presence of corrosive fumes or materials in the surrounding environment, supply burner with clear air from an uncontaminated area or provide a filtering system which shall not impede burner operation.

Exhaust

- Do not allow exhaust to accumulate in the work area. Provide means for exhausting them from the furnace and the building.

Access

- Install the burner in such a way that you can get easy access for inspection and maintenance.

Environment

- Verify the local environment matches the operating specifications of the burner. Check the following items:
  - Type and supply pressure of the fuel
  - Availability of enough fresh, clean combustion air
  - Humidity, altitude, and temperature of air
  - Absence of damaging corrosive fumes or materials in the air

Preparing the Burner

- Several components may need to be installed on a burner before it can operate. See installation instructions on the following pages.

Rotate the Rear Cover (Optional)

To rotate the rear cover, do the following (see Figure 2.1).

- Disconnect the fuel piping at a union in the piping or the inlet block provided on the burner (1).
- Remove the four bolts used to hold the fuel inlet (1).
- Remove the inlet block, O-rings, and Orifice Plate from the rear cover (1).

  NOTE: Be careful not to lose or damage the orifice plate or the O-rings.

- Remove the four bolts used to hold the rear cover (2).
- Rotate the rear cover (3) to the desired position.
- Install the four bolts on rear cover (2) in a crosswise manner.
- Reconnect the inlet block, O-rings, orifice plate and the piping. Verify that the O-rings show no signs of damage.

CAUTION: The maximum torque value for fasteners used on the Phoenix burners is 25 ft.lbs, unless otherwise noted. Applying a higher torque may result in damage.

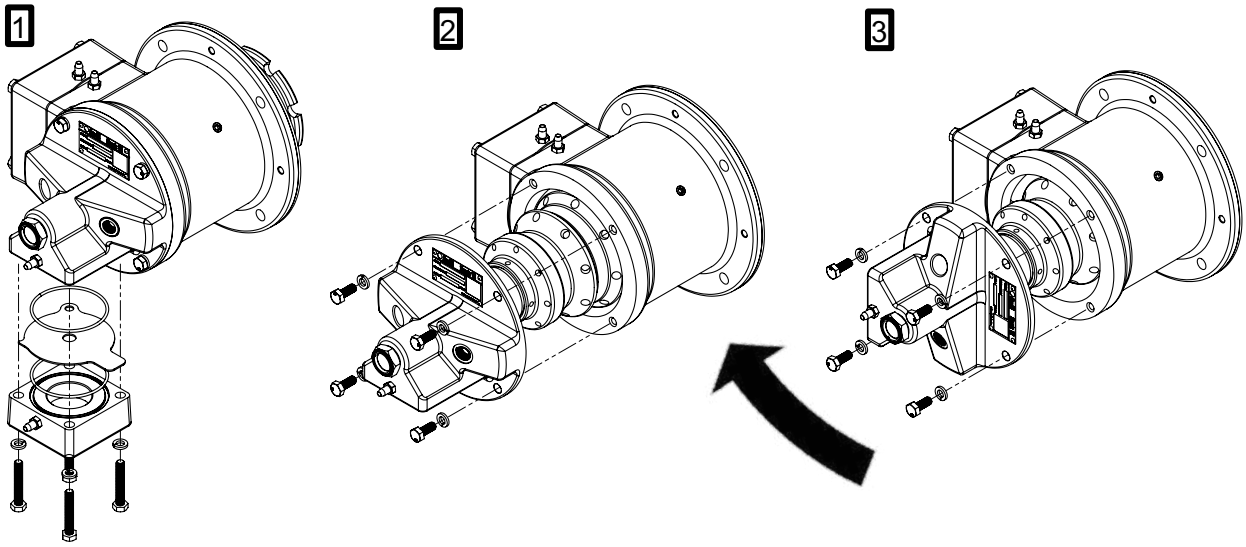

Figure 2.1 – Rotate the Rear Cover

CAUTION: DO NOT USE an impact wrench at risk of damaging the bolts or threads in the burner body.

Installing the Flame Supervision

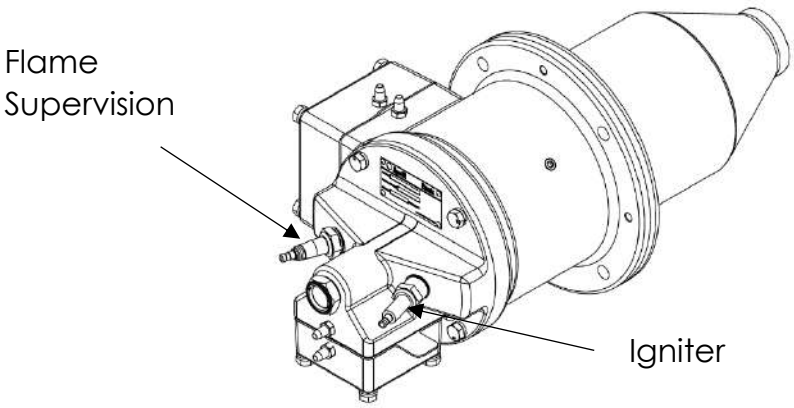

Figure 2.2 – Installing the Flame Supervision

Phoenix VH burners are offered with UV scanner and flame rod flame supervision options. Check the Phoenix VH specification sheets for availability.

Install the flame supervision into the ½" or ¾" NPT opening/adapter in the rear cover.

Verify that you connect the flame supervision of a burner to the electrical circuit of that burner.

WARNING: If you connect the flame supervision of a burner to the flame safety system of the wrong burner, you can cause fires and explosions.

Installing the Igniter

Verify the gap between the center electrode and grounding rod is no less than 1.5mm and no more than 2.0mm.

Install the igniter into the opening opposite to the flame supervision in the rear cover.

CAUTION: Do ***NOT*** apply any assembly compound to the threads of the igniter. You can cause bad grounding of the spark plug if you apply grease to it. Bad ground of the spark may result in a weak spark.

CAUTION: a 6,000-7,000 VAC ignition transformer must be used to supply power to the igniter. If equipment other than recommended are used, the performance may vary from Algas-SDI published values.

Ignition System

- For the ignition system use:
  - 6,000-7,000 VAC transformers
  - Full wave spark transformers
  - One transformer per burner
- DO NOT use:
  - 10,000 VAC transformers
  - Twin outlet transformers
  - Distributor type transformers
  - Half wave spark transformers

Burner Installation

- Verify that the wall of the chamber is strong enough to support the weight of the burner. If necessary, reinforce the area where you plan to install the burner to support the weight of the burner.

- Refractory furnace walls must allow for thermal expansion as recommended by the refractory supplier – the wall should apply no stress on the combustor or refractory layer surrounding the combustor. Expansion joints built into the furnace wall shall permit the furnace shell, combustor or collar surrounding the combustor to move as a unit in the event of unequal expansion in the refractory wall and furnace shell.

- The combustor shall not extend beyond the inside of the furnace wall more than 1”. Beyond this length it is necessary to add a spacer on the outside of the furnace to keep the end of the combustor within 1” of the furnace wall.

CAUTION: If the combustor is shorter than the furnace wall thickness the combustor should be recessed into the wall. To prevent refractory overheating, a 45° chamfer should be applied.

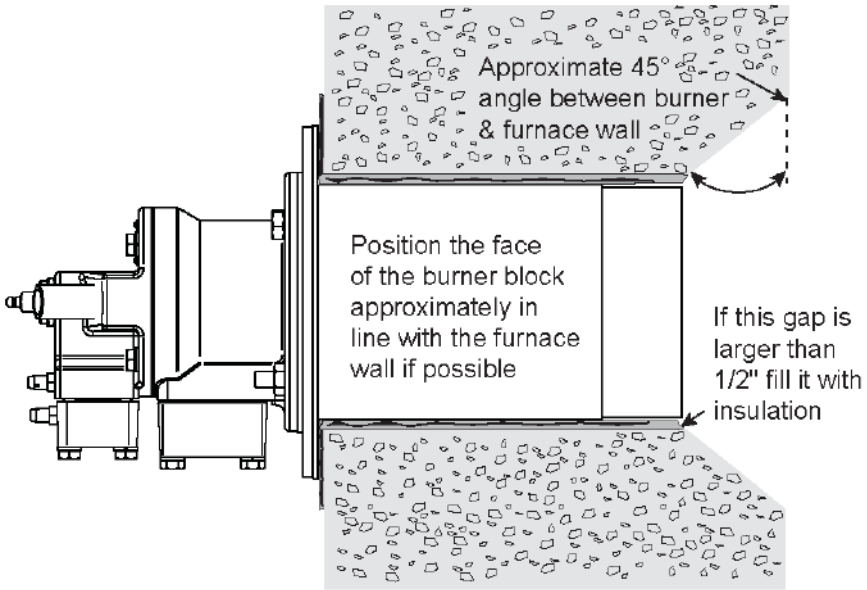

Figure 2.3 – Combustor Position

Alloy Combustor

- Mount the burner to the chamber wall using customer supplied M10 X 1.5mm bolts (4x) and M10 lock washers (4x), or equivalent.
- Verify that the mounting gasket (1) that was supplied with the burner is installed between the burner and the chamber wall (2).
- Verify that the mounting gasket (1) does not leak.
- Check the size of the clearance between the furnace wall and combustor. If the gap (3) around the combustor and furnace chamber is larger than ½", then pack the gap with ceramic fiber (4).

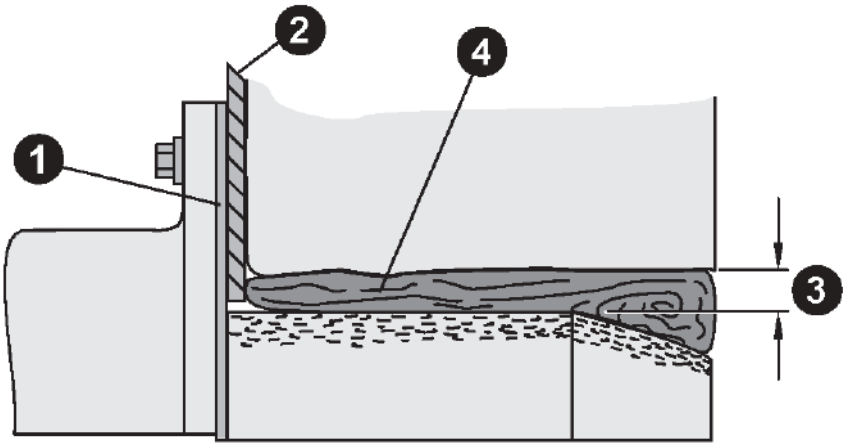

Figure 2.4 – Alloy Combustor Mounted to Furnace Chamber

Silicon Carbide (SiC) Combustor

- Mount the burner to the chamber wall using customer supplied M10 X 1.5mm bolts (4x) and M10 lock washers (4x), or equivalent.
- Verify that a mounting gasket (1) is installed between the burner flange and chamber wall (2).
- Verify that the supplied retaining ring gasket (5) is installed between the SiC combustor and retaining ring (6).
- Verify that neither gasket (1) nor (5) leaks.
- Check the size of the clearance between the furnace wall and combustor. If the gap (3) around the combustor and furnace chamber is larger than ½", then pack the gap with ceramic fiber (4) over a maximum length of 4" (100mm). Maintain a clearance of at least 3/16" (5mm) over the remaining straight length of the combustor. Do not wrap the cone.
  NOTE: The SiC combustor is not fastened to anything, some movement is to be expected after installation is complete.

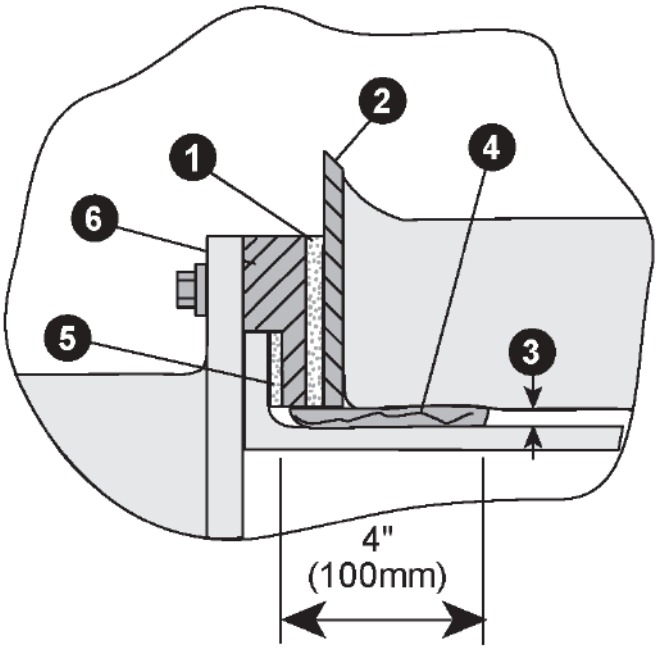

Figure 2.5 – Silicon Carbide Combustor Mounted to Furnace Chamber

Refractory Combustor

- Verify that a mounting gasket (1) is installed between the burner flange and the refractory combustor (2).
- Mount the burner onto the threaded studs on the refractory combustor and fasten the nuts included with the refractory combustor in a crosswise manner and torque to a minimum of 20 ft.lbs and maximum of 25 ft.lbs.
- Verify that the refractory combustor gasket (4) is installed between the refractory combustor flange (3) the chamber wall (5)
- Use hard brickwork anchored to the furnace shell to support the weight of the refractory combustor (6). If the gap around the refractory combustor and furnace chamber shell (7) is larger than ½", then pack the gap with ceramic fiber (8).

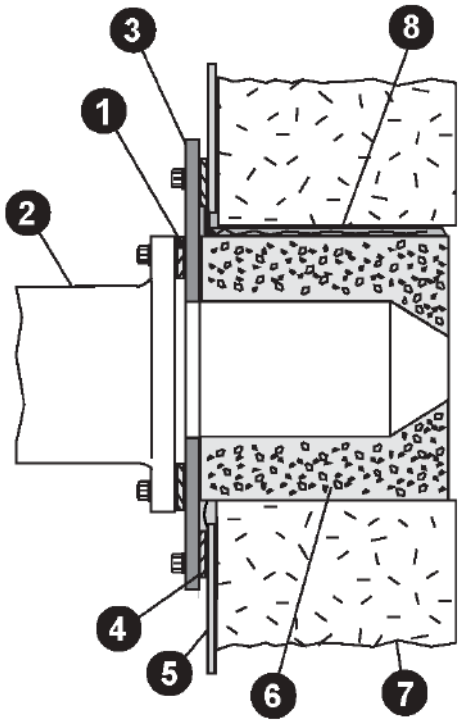

Figure 2.6 – Refractory Combustor

Large Refractory Combustors

- On burners VH500 and larger, the refractory combustor must be tightly surrounded by a collar made of brick, plastic refractory, or a castable refractory of at least 4” (100mm) minimum thickness on all sides of the combustor.
- If the collar is cast around the combustor, a thin plastic film (i.e. Saran Wrap® or Glad Wrap®) should be wrapped around the combustor to keep moisture from leaching into the combustor.
  The collar should be anchored to the furnace shell with suitable anchors and must be constructed to rest on a surface capable of supporting its weight, such as a hearth or solid refractory or brick wall. For furnaces that are unable to support the weight of the refractory combustor, a stainless-steel shelf can be welded to the shell to support the collar.

Refractory Combustor Curing Schedule

- The refractory combustors are cured up to a temperature of at least 550ºF.
- Final curing should be done after installation.
- The recommended curing schedule is;
  - Ambient to 600ºF at 100ºF per hour.
  - 600ºF to 1000ºF at 25ºF per hour. Hold the refractory combustor at 1000ºF for 12 hours.
  - Cool or raise the operating temperature at a rate of 100ºF per hour.
  - After initial curing, refractory combustors are to be heated or cooled at a rate of no faster than 200ºF per hour.
    CAUTION: Excessive combustor holder temperature can cause problems.

Refractory Combustor Holder Temperature

- The correct insulation of refractory combustors in furnaces results in longer combustor life and adds value by reducing downtime and maintenance.
- Overheating can be reduced by carefully sealing the refractory combustors in the wall to prevent the leakage of hot gases back to the furnace shell.
- In high temperature (>1,400ºF) fiber-wall furnace installations, the length of the metallic wrapper should extend no farther than the point in the wall where the interface temperature is higher than 1800ºF.

Checklist After Installation

To verify proper system installation, do the following:

- Verify that there are no leaks in the gas and air lines.
- Verify all components of the flame monitoring control system are properly installed. This includes verifying that all switches are installed in the correct locations, and all wiring, pressure and impulse lines are properly connected.
- Verify components of spark ignition system are installed and functioning properly.
- Verify that the blower rotates in the correct direction. If incorrect, have a qualified electrician rewire the blower to reverse its rotation.
- Verify all valves are installed in the proper location and correctly orientated relative to the gas or air flow direction.

Prepare for Start Up/Adjustment

After installation of the burner system components is complete, the following shall be followed to prepare for adjustment:

- Close all the burner shut-off valves.
- Try to light a burner before the purge and other timing relays have finished their cycles. Verify that the flame monitoring system indicates a flame failure.
- Trip pressure switches and other limit interlocks. Verify that the main gas valve train closes.

DANGER: If simulated limits or simulated flame failures do not shut down the fuel system with the required failure response time, immediately correct the problem and retest before proceeding

3. OPERATION

Initial Setup

- Fully open the main air valve.
- Startup combustion air supply.
- Adjust the control valve in the air supply line to the air differential pressure between taps A and B to the stated pressure for high fire in the Phoenix VH specification sheet.
- Ignite burner per instructions on the following pages for gas flow in fixed air or on-ratio gas systems. Use taps C and D to set gas flow at high fire.
- Confirm flame safety systems are functional.

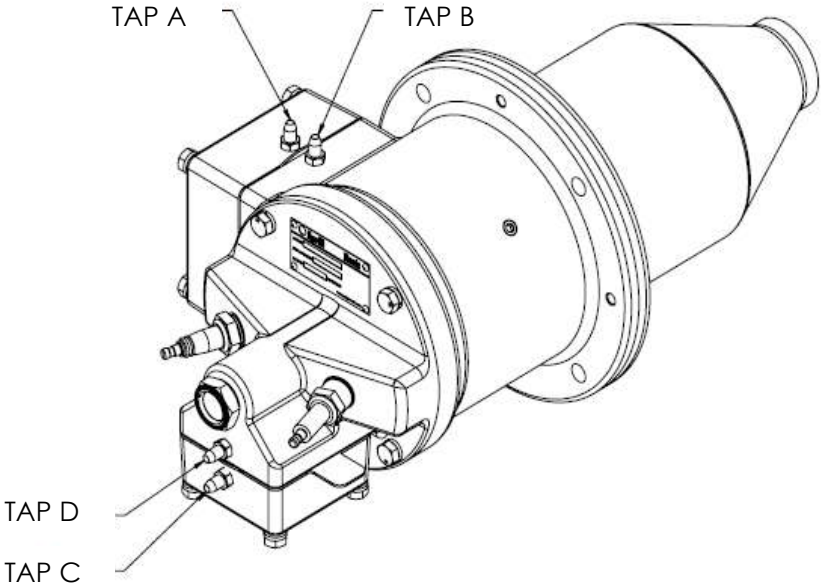

Figure 3.1 – Pressure Taps Locations

Fixed Air Systems (Air Flow)

- Use a small flat hear screwdriver to open pressure taps A and B.
- Attach manometer to taps A and B.
- Adjust air valve until differential pressure is at required value specified in Phoenix VH Specification Sheet.
- Remove manometer and close pressure taps A and B.

Fixed Air Systems (Gas Flow)

- Turn gas valves down to low fire position.
- Start the ignition sequence.
- Visually check for flame to confirm that burner has lit.
- Use a small flat head screwdriver to open pressure taps C and D.
- Attach manometer to taps C and D.
- Turn gas valve to high fire.
- Adjust gas valve until differential pressure is at required value stated in Phoenix VH specification sheet.
- Remove manometer and close pressure taps C and D.

On-ratio Gas Systems (Air Flow)

- Adjust air valve to low fire.
- Use a small flathead screwdriver to open pressure taps A and B.
- Connect manometer to taps A and B.
- Adjust air valve until differential pressure is approximately 0.2” WC.

On-ratio Gas Systems (Gas Flow)

- Turn the gas flow limiting valve to 50% open.
- Open gas shut-off valve.
- Start the ignition sequence.
- Visually check for flame to confirm burner has lit.
- Turn air valve to high fire position.
- Confirm air differential pressure is still at the set point and adjust accordingly.
- Use a small flat head screwdriver to open pressure taps C and D.
- Attach manometer to taps C and D.
- Adjust gas valve until differential pressure is at required value stated in Velocity Heat specification sheet.
- Remove manometer and close pressure taps C and D.

CAUTION: Do not exceed the pressure rating of the ratio regulator.

- Turn air valve to low fire position.
- Adjust the ratio regulator until lowest fire is achieved while still maintaining flame signal.
- Run the burner through another low fire to high fire to low fire cycle.
- Confirm the differential pressure and low fire setting has not changed.

Manual Startup Guide

- Startup combustion air supply.
- Open gas shut-off valve and start ignition sequence.
- Visually check for flame to confirm that burner has lit.

DANGER: If no flame can be seen, close the gas valve to stop gas flow. Allow flame safety to purge the body of gas before attempting to restart the burner.

Manual Shutdown Guide

- Close the gas shut-off valve at the burner.
- Allow the air supply to run until the temperature of the chamber is less than 1000 °F.
- Shut off combustion air supply.

4. MAINTENANCE

Preventative maintenance is the key to a reliable, safe, and efficient system. The core of any preventive maintenance system is a list of periodic tasks. The following are suggestions for monthly and annual checks:

NOTE: The monthly and yearly lists are an average interval. In the case of a dirty environment, service interval may need to be shortened.

WARNING: Extreme caution must be taken due to the potential of flammable vapor being exposed to the atmosphere creating an ignition. Do not operate any equipment that may create a spark during maintenance.

WARNING: High voltage ignition transformer can cause severe injury or death when handled incorrectly. Do not perform maintenance until power has been disconnected from ignition transformer.

Monthly Checklist (Optional)

- Leak test safety shut-off valves for tightness of closure.
- Test air pressure switch settings by checking switch movements against pressure settings and comparing with actual impulse pressure.
- Visually check ignition cable and connectors.
- Inspect impulse piping for leaks.
- Clean and inspect burners.
- Verify that the following components are not damaged or distorted:
    - Burner nozzle
    - Igniter
    - Flame supervision
    - Combustor
    - If applicable, remove and clean all the orifice plates.

Annual Checklist

- Inspect flame supervision devices for good condition and cleanliness.
- Check for proper inlet air/gas ratios.
- Test all the alarm systems for proper signals.
- Check igniters for proper gap.
- Check valve motors and control valves for free, smooth action and adjustment.
- Check for proper operation of ventilating equipment.
- Test the interlock sequence of all safety equipment; manually make each interlock fail, noting that related equipment closes or stops as specified by the manufacturer.
- Test the flame monitoring control system by manually shutting off gas to burner.
- Test main fuel hand-valves for operation.
- Clean or replace the combustion air blower filter.

5. TROUBLESHOOTING

Troubleshooting Procedures

Potential Problem	Possible Cause	Proposed Solution
Cannot initiate Start-up sequence.	Malfunction of flame monitoring control system such as shorted out flame sensor or electrical noise in sensor line.	Have a qualified electrician investigate and solve.
	Flame safety purge cycle not completed.	Check flame monitoring control system or purge timing.
	Main power is off.	Verify power to control system is on.
	No power to control unit.	Have qualified electrician investigate.
Start-up sequence runs but burner does not light.	Not enough gas: Air in the gas line.	Check output from flame safety. Open gas ball valve. Purge gas line.
	Not enough gas: Gas valve not open.	Check wiring to the automatic gas shut-off valve.
	Not enough gas: Gas solenoid valve does not open.	Check solenoid valve coil for proper orientation. Replace if needed.
	Not enough gas: The gas pressure out of the main gas pressure regulator is too low.	Check start-up setting. Check regulator and adjust if necessary.
	Too much gas: Gas pressure out of the main gas pressure regulator is too high.	Check start-up setting. If needed, remove regulator, and investigate.
	Too much gas: Manual gas butterfly valves have been opened too far.	Check pressure and setting against spec sheet and adjust accordingly.
	Too much gas: Improper gas valve train sequence.	Verify solenoid valve is down-stream of ratio regulator.
	No ignition: The igniter is not correctly grounded to burner.	Clean the threads of the igniter and the burner. Do not apply grease to the thread of the spark plug.
	No ignition: The igniter is fouled.	Clean the igniter.
	No ignition: Open circuit between the ignition transformer and the igniter.	Repair or replace the wiring to the igniter.
	No ignition: There is no power to the ignition transformer.	Restore power to the ignition transformer.

Potential Problem	Possible Cause	Proposed Solution
The low fire flame is weak or unstable.	Low fire adjusted too low.	Increase low fire gas setting.
	Not enough gas.	Check start-up settings and adjust to increase low gas flow.
	Not enough air.	Check start-up settings. Check air plumbing, controls, and valves for leaks.
The burner turns off when cycling to high fire.	Fuel rich mixture.	Check start-up settings. Check air plumbing, controls, and valves.
The burner is unstable or produce soot and/or smoke.	The air/gas ratio is incorrect.	Measure all gas pressures and air pressures. Compare to initial start-up settings and adjust as necessary.
The burner is not performing as specified and does not respond to adjustment.	Weak flame signal.	Check condition of flame monitoring device.
	Internal damage to the burner. Parts loose or dirty within the burner.	Contact Algas-SDI.
Cannot achieve full burner capacity.	Air filter is blocked.	Clean or replace air filter.
	Increased furnace chamber pressures.	Re-check setup pressures and compare to specification sheet.
	Gas pressure is too low into the main gas pressure regulator.	Adjust gas pressure.
Air/gas leakage around burner	Insufficient seal around air/gas pipe connections	Reinstall connections with thread sealant applied. Soft set thread sealant for use in applications up to 500°F recommended.
Weak flame signal	Insufficient grounding to the burner.	Re-check grounding between the burner and flame safety.
		Measure voltage from ground to neutral. If more than expected (>3VAC) voltage exists, connect ground to the same circuit where it is bonded to neutral at a breaker box.
Low or no ignition spark	The air/gas ratio is incorrect.	Check the peep sight to see if the ignitor sparks. If it does, confirm the air-fuel ratio, such as air in the gas lines due to the fuel pipe being opened during service..
	Igniter electrode gap too big	If no spark, take ignitor out and inspect gap between the electrodes is no more than 2mm. Re-gap or replace ignitor if necessary.
	Broken igniter insulation	Replace igniter.
	Cable too long	If still no spark, try connecting a short ignition cable. Lower power transformers require short runs of ignition cable.

6. SPARE PARTS

Spare Part List Models VH0015 – VH0040

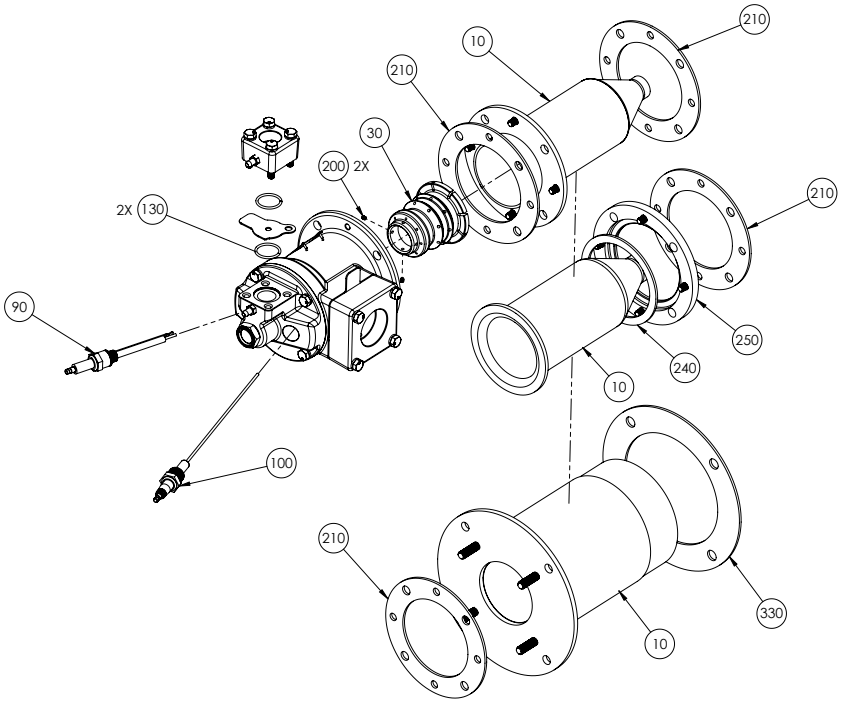

Item No	Description	Qty.	VH0015	VH0025	VH0040
10	Combustor, Alloy, High Velocity	1	7001-4019	7001-4020	7001-4021
10	Combustor, Alloy, Medium Velocity	1	7001-4020	7001-4021	7001-4022
10	Combustor, Ceramic, High Velocity	1	7001-5118	7001-5119	7001-5120
10	Combustor, Ceramic, Medium Velocity	1	7001-5119	7001-5120	7001-5121
10	Combustor, Refractory, High Velocity	1	7001-5368	7001-5367	7001-5369
10	Combustor, Refractory, Medium Velocity	1	7001-5367	7001-5369	7001-5370
30	Nozzle, Cast Iron[1]	1	7001-5104	7001-5109	7001-5110
30	Nozzles, Cast Iron, Flame Rod, Grounding[2]	1	7001-4046	7001-4047	7001-4048
30	Nozzle, Stainless Steel	1	7001-5176	7001-5177	7001-5178
30	Nozzle, Stainless Steel, Flame Rod, Grounding[2]	1	7001-4070	7001-4071	7001-4072
90	Igniter	1	7001-9001		
100	Flame Rod	1	7001-9015-2		
130	O-ring	2	7001-9004		
200	Nozzle Set Screw	2	7001-9047		
210	Mounting Gasket	2	7001-5117		
240	Ceramic Combustor Gasket	1	7001-5123		
250	Ceramic Combustor Retaining Ring	1	7001-5076		
330	Refractory Combustor Gasket	1	7001-5390		

[1] For use with all burners using alloy or ceramic combustors.
[2] For use with burners using refractory combustors.

Spare Part List Models VH0050 – VH0075

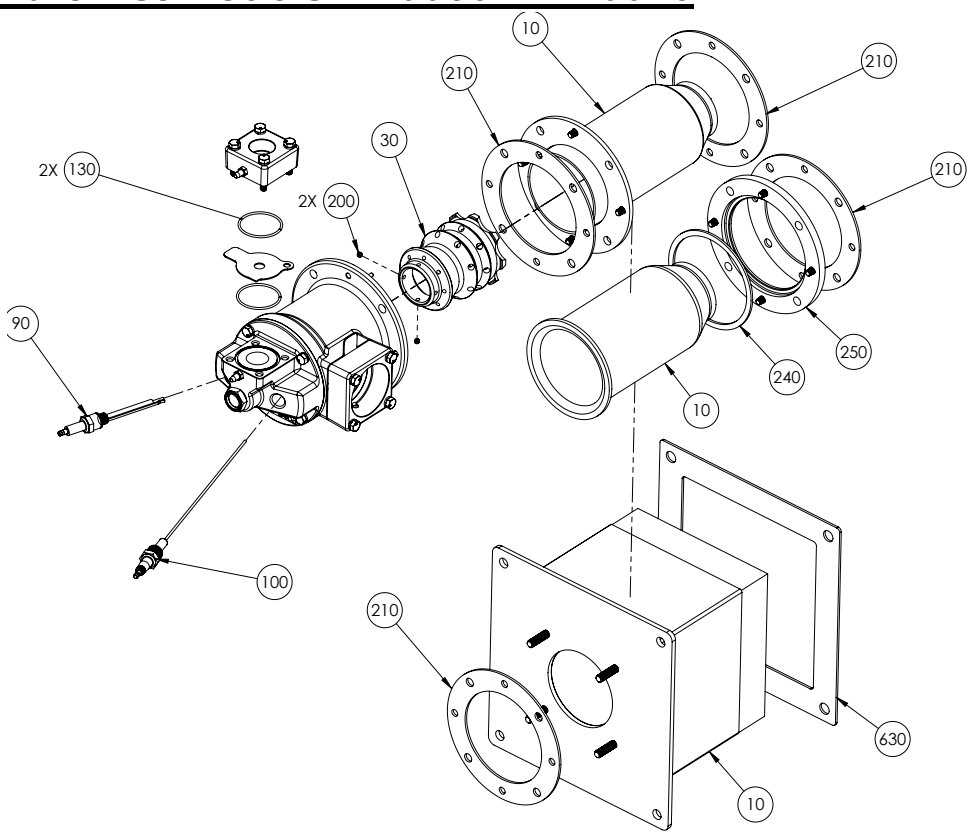

Item No	Description	Qty.	VH0050	VH00075
10	Combustor, Alloy, High Velocity	1	7001-4012	7001-4011
10	Combustor, Alloy, Medium Velocity	1	7001-4011	7001-4010
10	Combustor, Ceramic, High Velocity	1	7001-5088	7001-5087
10	Combustor, Ceramic, Medium Velocity	1	7001-5087	7001-5086
10	Combustor, Refractory, High Velocity	1	7001-5359	7001-5358
10	Combustor, Refractory, Medium Velocity	1	7001-5358	7001-5360
30	Nozzle, Cast Iron[1]	1	7001-5023	7001-5066
30	Nozzles, Cast Iron, Flame Rod, Grounding[2]	1	7001-4044	7001-4045
30	Nozzle, Stainless Steel	1	7001-5171	7001-5172
30	Nozzle, Stainless Steel, Flame Rod, Grounding[2]	1	7001-4069	7001-4068
90	Igniter	1	7001-9001	
100	Flame Rod	1	7001-9015-1	
130	O-ring	2	7001-9005	
200	Nozzle Set Screw	2	7001-9014	
210	Mounting Gasket	2	7001-5098	
240	Ceramic Combustor Gasket	1	7001-5093	
250	Ceramic Combustor Retaining Ring	1	7001-5077	
330	Refractory Combustor Gasket	1	7001-5391-01	

[1] For use with all burners using alloy or ceramic combustors using flame-rod or UV flame supervision.
[2] For use with burners using refractory combustors.

Spare Part List Models VH0100 – VH0200

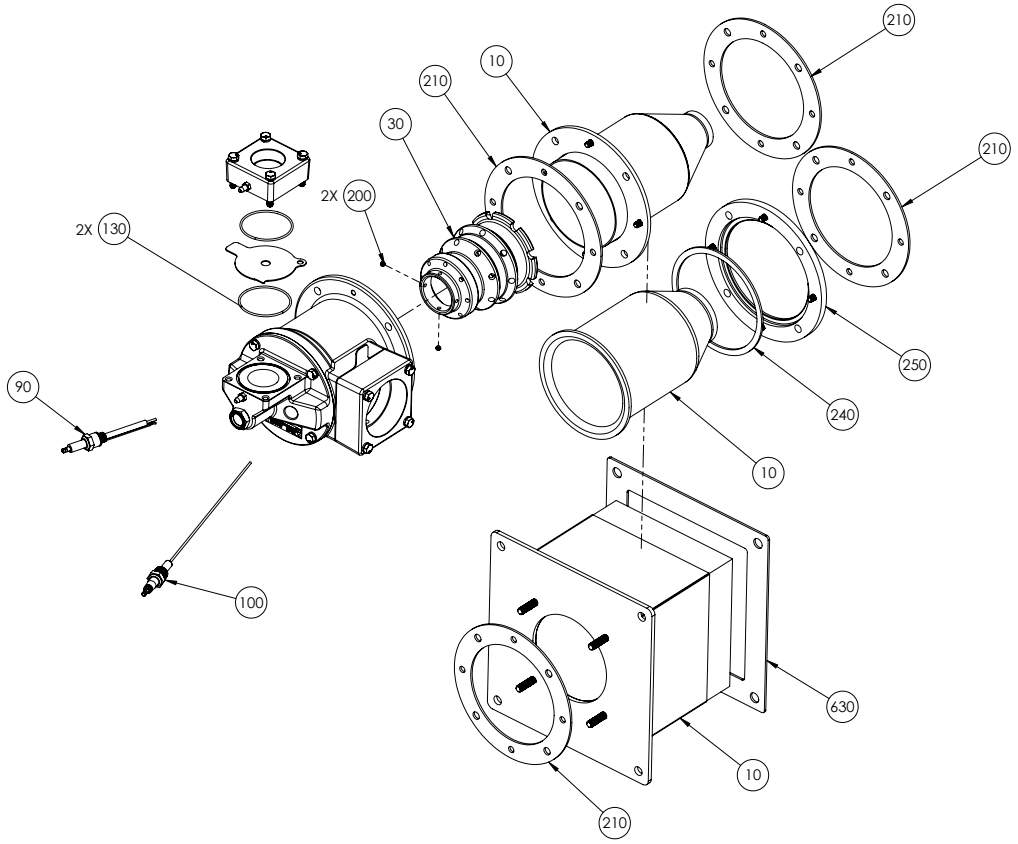

Item No	Description	Qty.	VH0100	VH0150	VH0200
10	Combustor, Alloy, High Velocity	1	7001-4002	7001-4004	7001-4006
10	Combustor, Alloy, Medium Velocity	1	7001-4001	7001-4003	7001-4005
10	Combustor, Ceramic, High Velocity	1	7001-5079	7001-5081	7001-5083
10	Combustor, Ceramic, Medium Velocity	1	7001-5035	7001-5080	7001-5082
10	Combustor, Refractory, High Velocity	1	7001-5350	7001-5352	7001-5354
10	Combustor, Refractory, Medium Velocity	1	7001-5349	7001-5351	7001-5353
30	Nozzle, Cast Iron[1]	1	7001-5275 (7001-5005 for burners with VH1X configuration codes)		
30	Nozzle, Cast Iron, Flame Rod, Grounding[2]	1	7001-4056 (7001-4043 for burners with VH1X configuration codes)		
30	Nozzle, Stainless Steel[1]	1	7001-5280		
30	Nozzle, Stainless, Flame Rod, Grounding[2]	1	7001-4058		
90	Igniter	1	7001-9001		
100	Flame Rod	1	7001-9015		
130	O-ring	2	7001-9006		
200	Nozzle Set Screw	2	7001-9014		
210	Mounting Gasket	2	7001-5029		
240	Ceramic Combustor Gasket	1	7001-5037		
250	Ceramic Combustor Retaining Ring	1	7001-5036		
330	Refractory Combustor Gasket	1	7001-5391-01		

[1] For use with all burners using alloy or ceramic combustors using flame-rod or UV flame supervision.
[2] For use with burners using refractory combustors.

Spare Part List Model VH0300

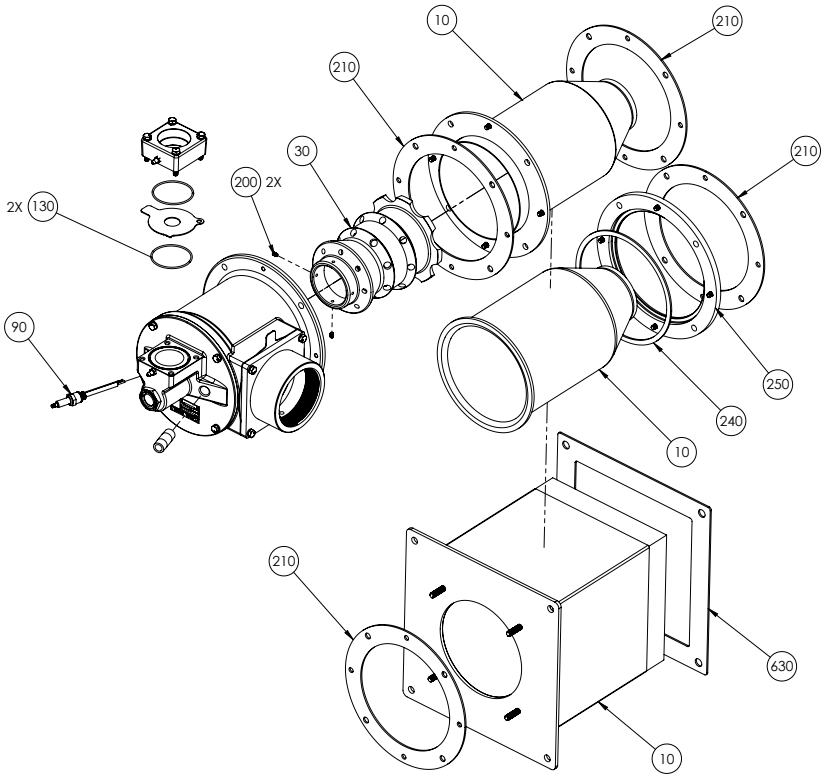

Item No	Description	Qty.	VH0300
10	Combustor, Alloy, High Velocity	1	7001-4014
10	Combustor, Alloy, Medium Velocity	1	7001-4015
10	Combustor, Ceramic, High Velocity	1	7001-5089
10	Combustor, Ceramic, Medium Velocity	1	7001-5090
10	Combustor, Refractory, High Velocity	1	7001-5365
10	Combustor, Refractory, Medium Velocity	1	7001-5364
30	Nozzle, Cast Iron	1	7001-5043
90	Igniter	1	7001-9001
130	O-ring	2	7001-9006
200	Nozzle Set Screw	2	7001-9037
210	Mounting Gasket	2	7001-5072
240	Ceramic Combustor Gasket	1	7001-5094
250	Ceramic Combustor Retaining Ring	1	7001-5078
330	Refractory Combustor Gasket	1	7001-5391-03

Spare Part List Model VH0500 – VH0750

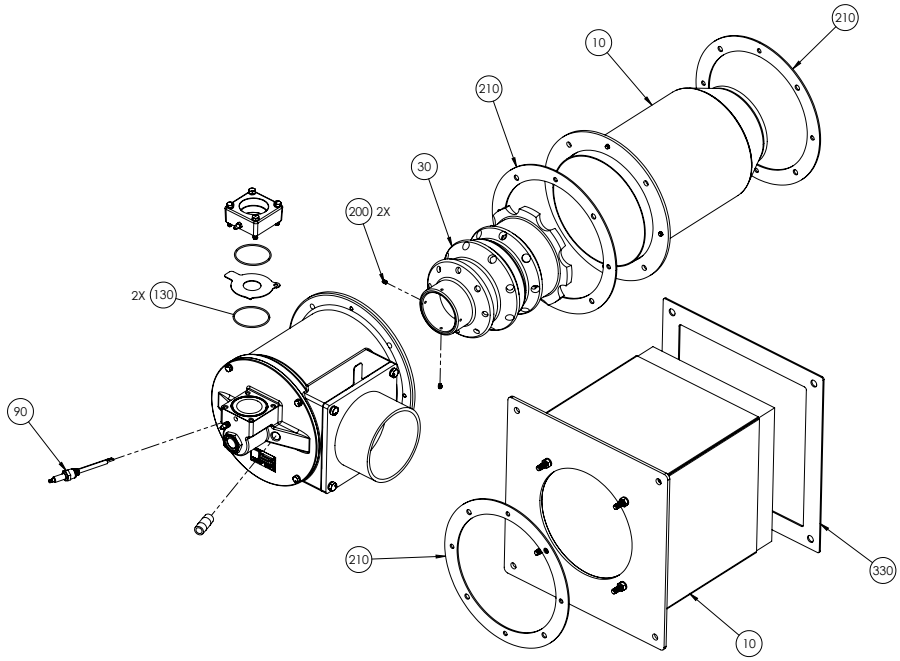

Item No	Description	Qty.	VH0500	VH0750
10	Combustor, Alloy, High Velocity	1	7001-4037	7001-4077
10	Combustor, Alloy, Medium Velocity	1	7001-4036	7001-4078
10	Combustor, Refractory, High Velocity	1	7001-5394	7001-5397
10	Combustor, Refractory, Medium Velocity	1	7001-5393	7001-5396
30	Nozzle, Cast Iron	1	7001-5223	7001-5373
90	Igniter	1	7001-9001	
130	O-ring	2	7001-9006	
200	Nozzle Set Screw	2	7001-9037	
210	Mounting Gasket	2	7001-5233	
330	Refractory Combustor Gasket	1	7001-5391-04	

Algas-SDI International, LLC
20224 66th Ave S.
Kent, Washington 98032
USA

Ph.: +1.206.789.5410

www.algas-sdi.com