Algas-SDI

Making Fuel Gases Easier to Use

NG | LPG | SNG | CNG | RNG

PHOENIX SH

Packaged Burner

Operations & Maintenance Manual

ISO 9001 Certified

This manual covers units built after May 2022 (S/N: 3220019427)

FILE: MANUAL PN 57100 PHOENIX SH revision 2/18/2025

WARNING

Read the OPERATION MANUAL before operating this equipment.

This equipment uses LPG and Natural Gas – flammable fuels. Inherent hazards exist and a thorough understanding of the equipment is required to allow safe operation and maintenance.

Allow only a TRAINED and FULLY QUALIFIED PERSON to service this equipment.

Any time a component must be replaced, use the same type, model, etc. DO NOT SUBSTITUTE! The consequences from such actions are unpredictable and may lead to dire outcomes.

The burner is likely to have HOT surfaces. Always wear protective clothing when approaching the burner.

Algas-SDI products uses materials that contain crystalline silica. Examples of these chemicals are respirable crystalline silica from bricks, cement or other masonry products and respirable refractory ceramic fibers from insulating blankets, boards, or gaskets. Dust created by sanding, sawing, grinding, cutting and other construction activities could release crystalline silica. Crystalline silica is known to cause cancer, and health risks from the exposure to these chemicals vary depending on the frequency and length of exposure to these chemicals. To reduce the risk, limit exposure to these chemicals, work in a well-ventilated area and wear approved personal protective safety equipment for these chemicals.

Symbols and Conventions

Special symbols are used to denote hazardous or important information. You should familiarize yourself with their meaning and take special notice of the indicated information.

Please read the following explanations thoroughly.

GENERAL WARNING OR CAUTION

Indicates hazards or unsafe practices which can result in damage to the equipment or cause personal injury. Use care and follow the instructions given.

FLAMMABLE GAS HAZARD

Indicates a potential hazard which can result in severe personal injury or death. Use extreme care and follow the instructions given.

ELECTRICAL DISCONNECT REQUIRED

Indicates a potentially dangerous situation which can result in severe personal injury or death or damage to equipment. Use great care and follow the instruction given.

Table of Contents

1. INTRODUCTION 6

PRODUCT DESCRIPTION 6
MAJOR COMPONENTS 7
FASTENERS & TOOLING 8

2. INSTALLATION 9

Handling 9
Storage 9
CHECKLIST BEFORE INSTALLATION 10
INSTALLING THE FLAME SUPERVISION 11
INSTALLING THE IGNITER 12
FINGER GUARD AND FILTERS 13
CHAMBER WALL 13
ALLOY COMBUSTOR 15
SILICON CARBIDE (SIC) COMBUSTOR 16
REFRACTORY COMBUSTOR 17
LARGE REFRACTORY COMBUSTORS 18
REFRACTORY COMBUSTOR CURING SCHEDULE 18
REFRACTORY COMBUSTOR HOLDER TEMPERATURE 18
BURNER PIPING 19
SUPPLY PIPING 19
CHECKLIST AFTER INSTALLATION 20
PREPARE FOR START UP/ADJUSTMENT 21

3. OPERATION 22

INITIAL SETUP 22
STEP 1: RESET THE SYSTEM 23
STEP 2: IGNITE THE BURNER 23
STEP 3: SET THE HIGH FIRE FUEL FLOW 23
STEP 4: SET THE LOW FIRE FUEL FLOW 24
STEP 5: STOP PROCEDURE 24

4. MAINTENANCE 25

MONTHLY CHECKLIST (OPTIONAL) 25
ANNUAL CHECKLIST 26

5. TROUBLESHOOTING 27

TROUBLESHOOTING PROCEDURES 27

6. SPARE PARTS 29

SPARE PART LIST MODELS SH040 29
SPARE PART LIST MODEL SH050 – SH075 30
SPARE PART LIST MODELS SH100 – SH200 31
SPARE PARTS LIST MODELS SH300 32

1. INTRODUCTION

Product Description

- The Phoenix SH (Simple Heat) packaged burner is a direct-fired nozzle-mix burner, that utilizes an integral air blower designed to operate with fixed combustion air or modulating air over a wide turndown range.

  Fixed Air Control (SH-FC) – Runs the blower at a constant speed and utilizes a fuel valve and actuator assembly to control the burner input. A ratio-regulator is used to set a reliable input pressure to the control valve while adding additional safety and control to compensate for fluctuations in air flow.

  Modulating Air Control (SH-VR) – Was designed with an inverter-ready motor allowing the blower assembly to modulate the air with a variable speed controller. The burner's input is controlled with a ratio regulator adjusting fuel pressure based on the burners air inlet pressure. An additional manual fuel valve is installed after the ratio regulator to provide high fire adjustments.

  Remote Blower (SH-XC/XR) – This is a configuration that offers an NPT air inlet block or an ANSI air inlet flange, depending on burner model, in the place of a packaged blower.

For performance and operational specifications refer to the Phoenix SH Specification Sheet.

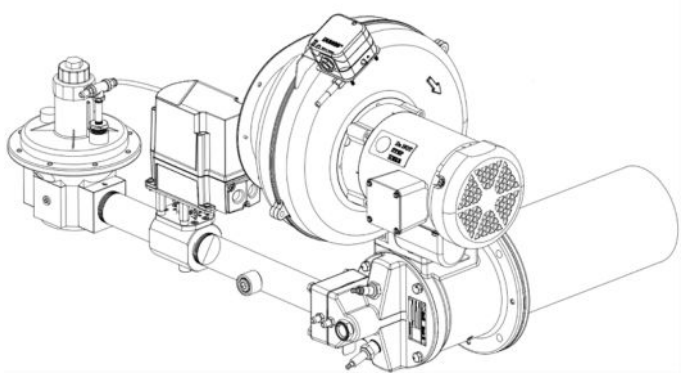

Figure 1.1 – Phoenix SH-FC Burner

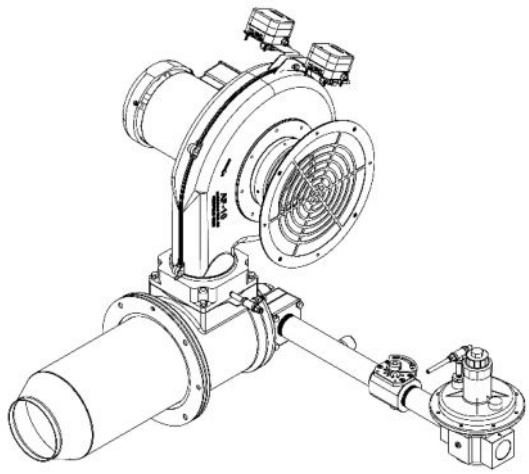

Figure 1.2 – Phoenix SH-VR Burner

Major Components

The Phoenix SH Burners consists of the following components (Refer to Figure 1.2):

- Burner Body
- Burner Nozzle
- Burner Rear Cover
- Combustor
- Fuel Inlet Block
- Blower Mounting Block
- Blower
- Motor (inverter-ready for variable speed drives)
- Igniter
- Flame Rod or UV Scanner Adapter
- O-rings
- Orifice Plates
- Integral Blower
- Control Valve and Actuator
- Ratio Regulator
- Air proving pressure switch
- Purge proving pressure switch (for modulating air configurations)

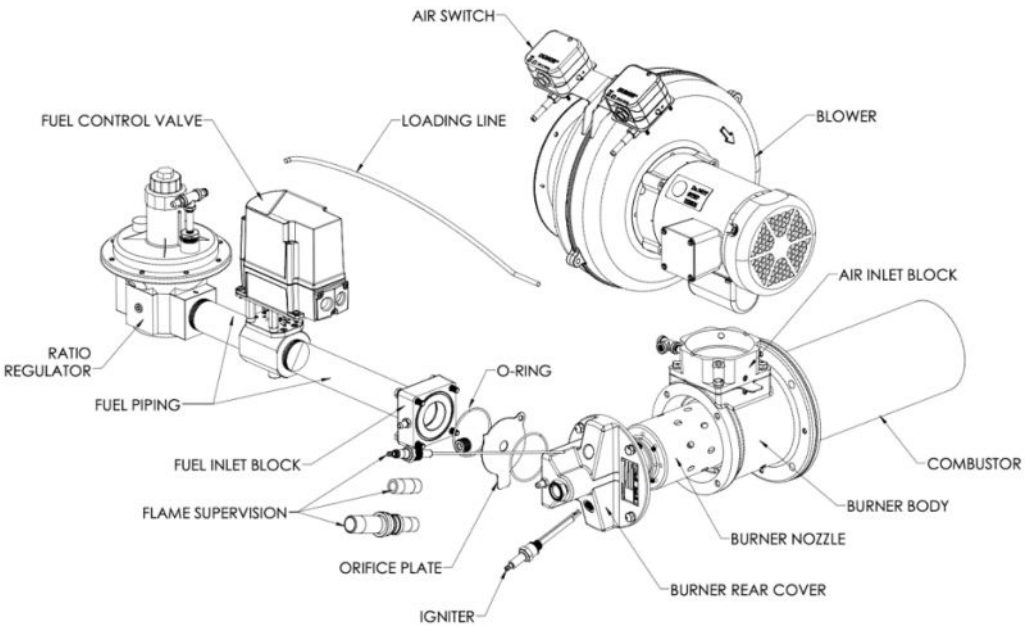

Figure 1.3 – Major Components

Fasteners & Tooling

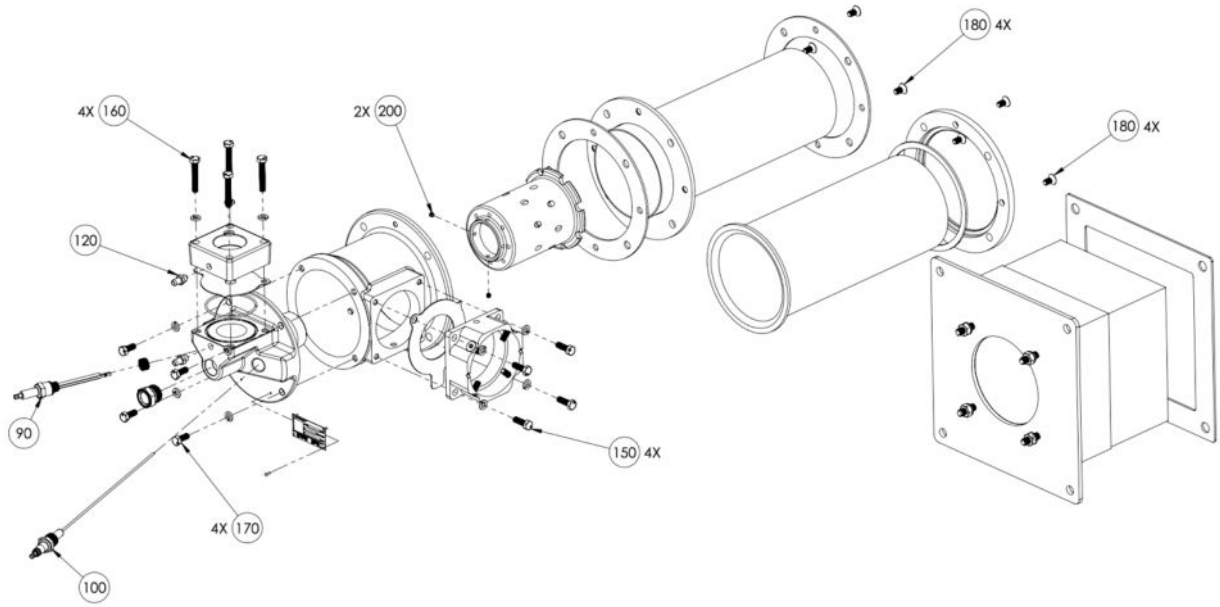

Item No	Tooling	Fastener	SH040	SH050-075	SH100-200	SH300
90	13/16” Wrench	Ignitor				
100	7/8” Wrench	Flame Rod				
120	3/16” Flat Head Screwdriver	Pressure Tap				
150	17mm Wrench	Hex Head Screw				
150	13mm Wrench	Hex Head Screw	M8			
160		Hex Head Screw	M8			
170		Hex Head Screw	M8			
180	5mm Hex Key	Flat Head Screw	M8			
200	2 - 3mm Hex Key	Set Screw	M4	M6		

2. INSTALLATION

Handling

- Verify that the area is clean.
- Protect the burner from weather, dirt and moisture.
- Protect burner from excessive temperature and humidity.
- Transport in original shipping container.
- Use appropriate support equipment, i.e. harnesses, straps, chains etc. when lifting burner components.
- Take care not to drop or damage the burner.

Storage

- Verify that the burner is clean and free of damage.
- Store burner in a cool, clean, dry room.
- After ensuring that everything is present and in good condition, keep the burner in the original package if possible.

Checklist Before Installation

Intake

To admit fresh combustion air from outdoors, provide an opening in the room of at least one square inch per 4,000 BTU/hr. In the presence of corrosive fumes or materials in the surrounding environment, supply burner with clear air from an uncontaminated area or provide a filtering system which shall not impede burner operation.

Exhaust

Do not allow exhaust to accumulate in the work area. Provide means for exhausting them from the furnace and the building.

Access

Install the burner in such a way that you can get easy access for inspection and maintenance.

Environment

Verify the local environment matches the operating specifications of the burner. Check the following items:

- Type and supply pressure of the fuel
- Availability of enough fresh, clean combustion air
- Humidity, altitude, and temperature of air
- Absence of damaging corrosive fumes or materials in the air
- Prevent direct exposure to water

Preparing the Burner

Several components may need to be installed on a burner before it can operate. See installation instructions on the following pages.

Installing the Flame Supervision

Phoenix SH burners are offered with UV scanner and flame rod flame supervision options. Check Phoenix SH specification sheets for availability.

Install the flame supervision into the ½" or ¾" NPT opening/adapter in the rear cover.

Verify that you connect the flame supervision of a burner to the electrical circuit of that burner.

WARNING: If you connect the flame supervision of a burner to the flame safety system of the wrong burner, you can cause fires and explosions.

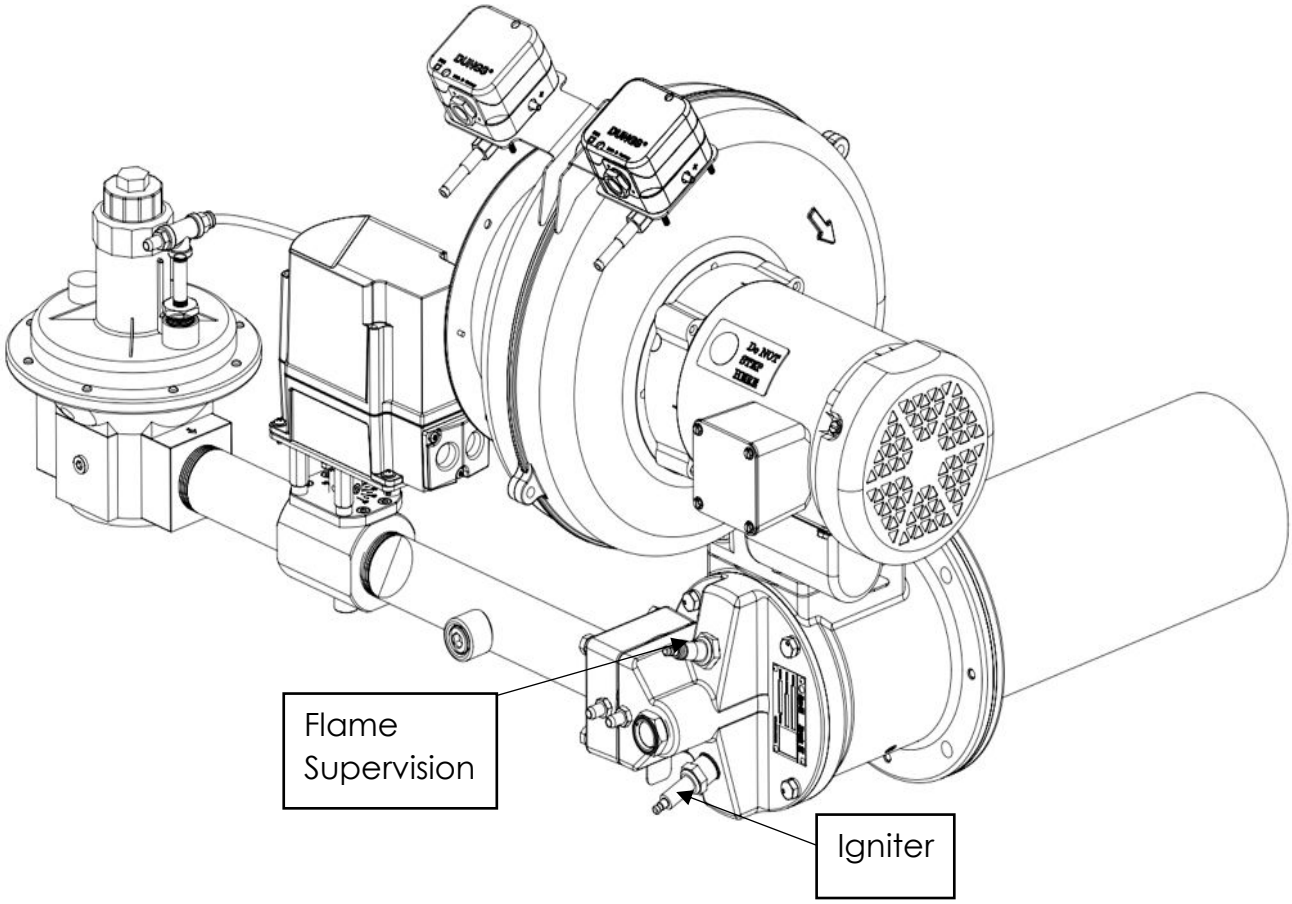

Figure 2.1 – Installing the Flame Supervision and Igniter

Installing the Igniter

Verify the gap between the center electrode and grounding rod is no less than 1.5mm and no more than 2.0mm.

Install the igniter into the opening opposite to the flame supervision in the rear cover.

CAUTION: Do ***NOT*** apply any assembly compound to the threads of the igniter. You can cause bad grounding of the spark plug if you apply grease to it. Bad ground of the spark may result in a weak spark.

CAUTION: a 6,000-7,000 VAC ignition transformer must be used to supply power to the igniter. If equipment other than recommended are used, the performance may vary from Algas-SDI published values.

Ignition System

- For the ignition system use:
  - 6,000-7,000 VAC transformers
  - Full wave spark transformers
  - One transformer per burner
- DO NOT use:
  - 10,000 VAC transformers
  - Twin outlet transformers
  - Distributor type transformers
  - Half wave spark transformers

Finger Guard and Filters

The SH blowers can be configured with the option of a finger guard or a filter which is ideal for environments with high dust or air born particulates.

A 2% or less reduction in output capacity can be expected with the use of a filter.

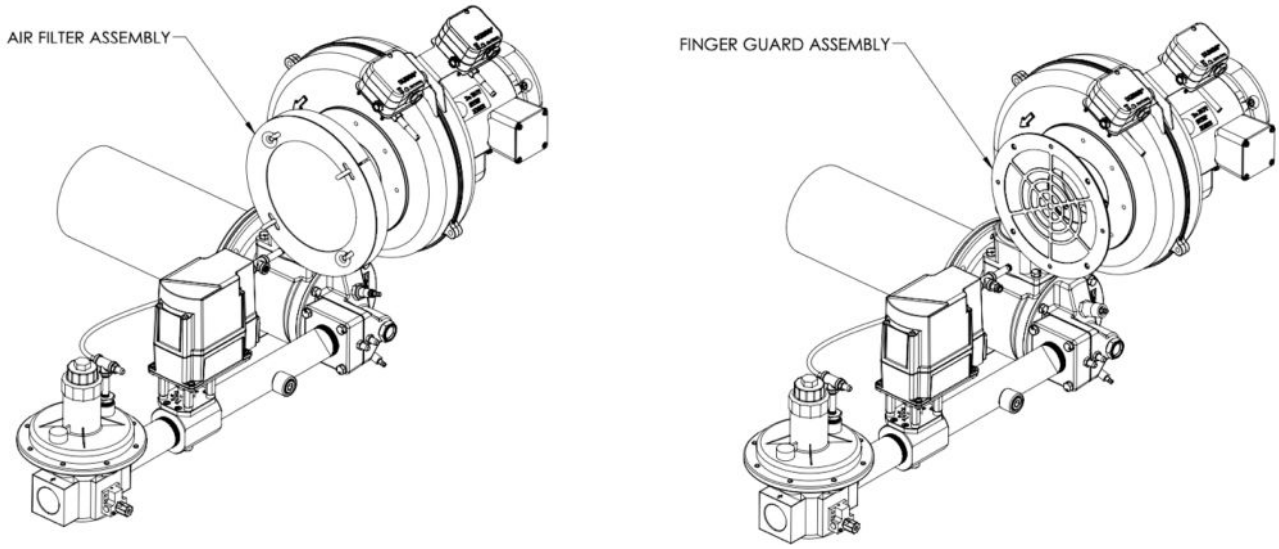

Figure 2.2 – Finger guard vs filter assembly

Chamber wall

- Provide an opening in the chamber wall at least ½” larger in diameter than the outside diameter of the combustor. Provide an accessible pressure tap on the chamber wall to measure the pressure inside the firing chamber. The pressure tap should be located near the burner.
- Verify that the wall of the chamber is strong enough to support the weight of the burner. If necessary, reinforce the area where you plan to install the burner to support the weight of the burner.
- Refractory furnace walls must allow for thermal expansion as recommended by the refractory supplier – the wall should apply no stress on the combustor or refractory layer surrounding the combustor. Expansion joints built into the furnace wall shall permit the furnace shell, combustor or burner block surrounding the combustor to move as a unit in the event of unequal expansion in the refractory wall and furnace shell.

- Provide an opening in the chamber wall at least ½” larger in diameter than the outside diameter of the combustor. Provide an accessible pressure tap on the chamber wall to measure the pressure inside the firing chamber. The pressure tap should be located near the burner.
- The combustor or combustion block must not extend beyond the inside of the furnace wall more than 1". Beyond this length it is necessary to add a spacer on the outside of the furnace to keep the end of the combustor or combustion block within 1/2" of the end of the wall.

CAUTION: If the combustor is shorter than the furnace wall thickness the combustor should be recessed into the wall. To prevent refractory overheating, a 45° chamfer should be applied.

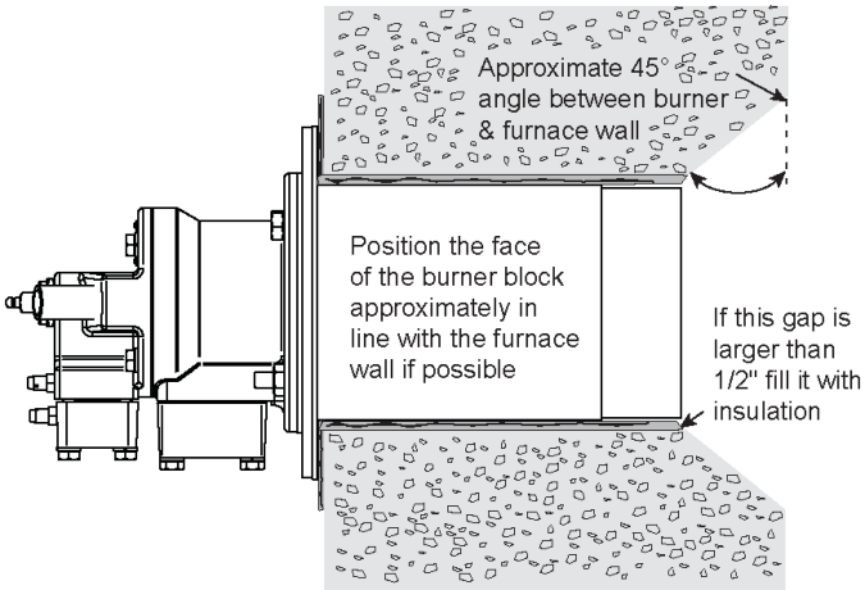

Figure 2.3 – Combustor Position

Alloy Combustor

- Mount the burner to the chamber wall using customer supplied M10 X 1.5mm bolts (4x) and M10 lock washers (4x), or equivalent.
- Verify that the mounting gasket (1) that was supplied with the burner is installed between the burner and the chamber wall (2).
- Verify that the mounting gasket (1) does not leak.
- Check the size of the clearance between the furnace wall and combustor. If the gap (3) around the combustor and furnace chamber is larger than ½", then pack the gap with ceramic fiber (4).

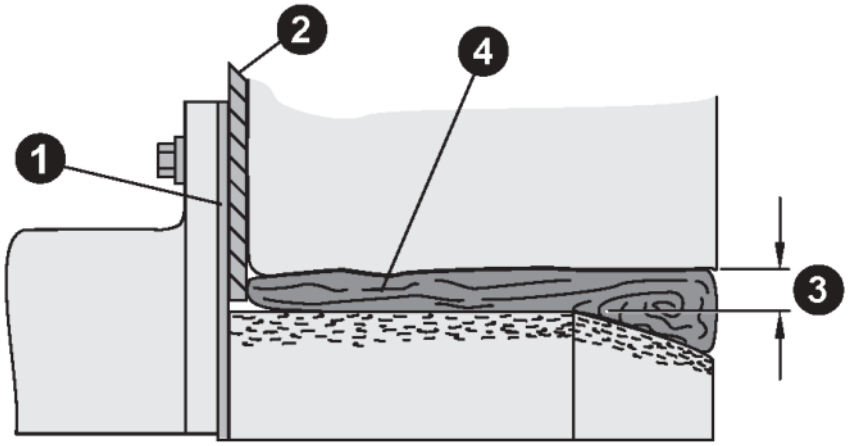

Figure 2.4 – Alloy Combustor Mounted to Furnace Chamber

Silicon Carbide (SiC) Combustor

- Mount the burner to the chamber wall using customer supplied M10 X 1.5mm bolts (4x) and M10 lock washers (4x), or equivalent.
- Verify that a mounting gasket (1) is installed between the burner flange and chamber wall (2).
- Verify that the supplied retaining ring gasket (5) is installed between the SiC combustor and retaining ring (6).
- Verify that neither gasket (1) nor (5) leaks.
- Check the size of the clearance between the furnace wall and combustor. If the gap (3) around the combustor and furnace chamber is larger than ½", then pack the gap with ceramic fiber (4) over a maximum length of 4" (100mm). Maintain a clearance of at least 3/16" (5mm) over the remaining straight length of the combustor. Do not wrap the cone.
  NOTE: The SiC combustor is not fastened to anything, some movement is to be expected after installation is complete.

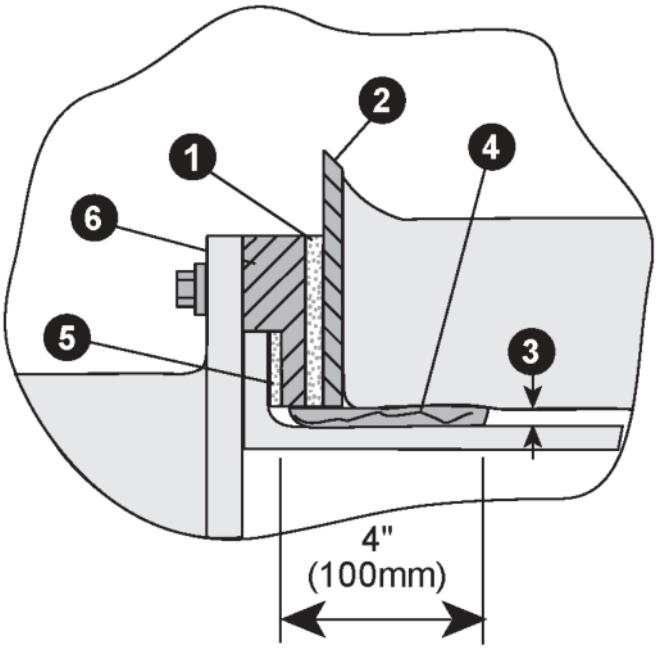

Figure 2.5 – Silicon Carbide Combustor Mounted to Furnace Chamber

Refractory Combustor

- Verify that a mounting gasket (1) is installed between the burner flange and the refractory combustor (2).
- Mount the burner onto the threaded studs on the refractory combustor and fasten the nuts included with the refractory combustor in a crosswise manner and torque to a minimum of 20 ft.lbs and maximum of 25 ft.lbs.
- Verify that the refractory combustor gasket (4) is installed between the refractory combustor flange (3) the chamber wall (5)
- Use hard brickwork anchored to the furnace shell to support the weight of the refractory combustor (6). If the gap around the refractory combustor and furnace chamber shell (7) is larger than ½", then pack the gap with ceramic fiber (8).

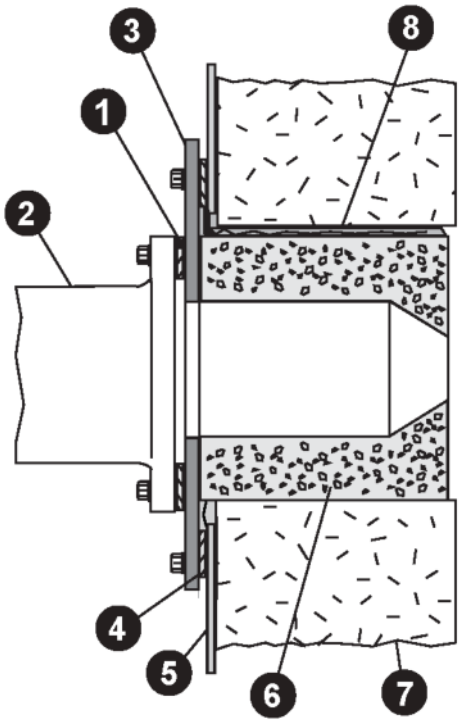

Figure 2.6 – Refractory Combustor

Large Refractory Combustors

- On burners SH500 and larger, the refractory combustor must be tightly surrounded by a collar made of brick, plastic refractory, or a castable refractory of at least 4” (100mm) minimum thickness on all sides of the combustor.
- If the collar is cast around the combustor, a thin plastic film (i.e. Saran Wrap® or Glad Wrap®) should be wrapped around the combustor to keep moisture from leaching into the combustor.
- The collar should be anchored to the furnace shell with suitable anchors and must be constructed to rest on a surface capable of supporting its weight, such as a hearth or solid refractory or brick wall. For furnaces that are unable to support the weight of the refractory combustor, a stainless-steel shelf can be welded to the shell to support the collar.

Refractory Combustor Curing Schedule

- The refractory combustors are cured up to a temperature of at least 550ºF.
- Final curing should be done after installation.
- The recommended curing schedule is;
  - Ambient to 600ºF at 100ºF per hour.
  - 600ºF to 1000ºF at 25ºF per hour. Hold the refractory combustor at 1000ºF for 12 hours.
  - Cool or raise the operating temperature at a rate of 100ºF per hour.
  - After initial curing, refractory combustors are to be heated or cooled at a rate of no faster than 200ºF per hour.
    CAUTION: Excessive combustor holder temperature can cause problems.

Refractory Combustor Holder Temperature

- The correct insulation of refractory combustors in furnaces results in longer combustor life and adds value by reducing downtime and maintenance.
- Overheating can be reduced by carefully sealing the refractory combustors in the wall to prevent the leakage of hot gases back to the furnace shell.
- In high temperature (>1,400ºF) fiber-wall furnace installations, the length of the metallic wrapper should extend no farther than the point in the wall where the interface temperature is higher than 1800ºF.

Burner Piping

The burner is factory assembled and shipped as ordered.

NOTE: If it is required to redirect piping be sure to meet the following conditions:

- Ratio regulator spring housing (1) is pointing up.
- Arrow on the ratio regulator points in the direction of gas flow.
- Integral fuel orifice and both O-rings (2) are re-installed.
- Same straight run of pipe (3) remains between the ratio regulator and the burner.

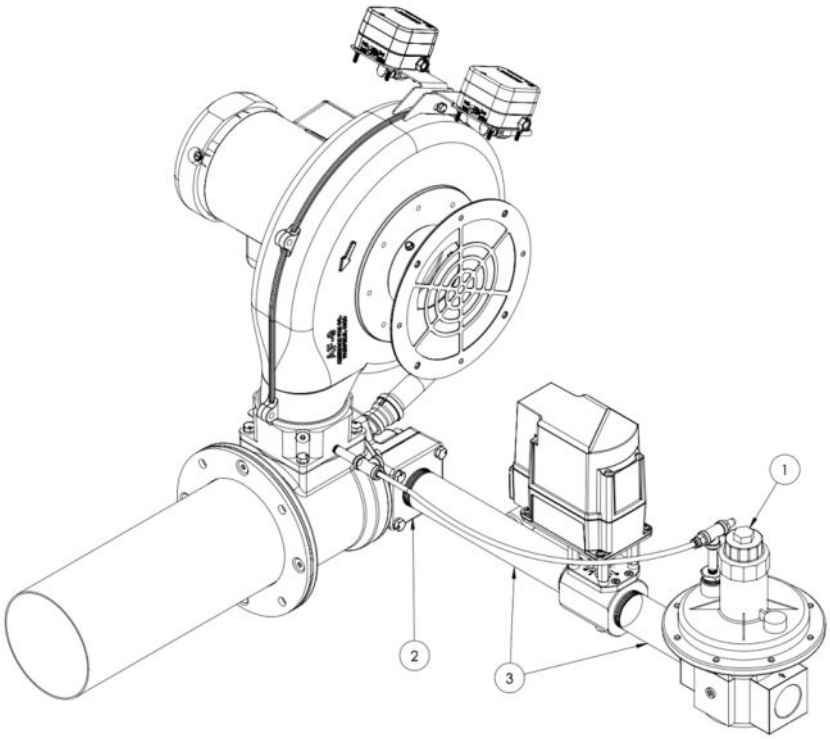

Figure 2.7 – Burner Piping

Supply Piping

Inlet pressure to the ratio regulator (if supplied) should be as specified on the Phoenix SH Specification Sheet. It should not exceed the maximum pressure rating of the ratio regulator.

- Locate the valve train close to the burner. The gas must reach the burner during the fixed trail for ignition.
- Sufficiently size shut off valves in the valve train.

Checklist After Installation

To verify proper system installation, do the following:

- Verify that there are no leaks in the gas and air lines.
- Verify all components of the flame monitoring control system are properly installed. This includes verifying that all switches are installed in correct locations and all wiring, pressure and impulse lines are properly connected.
- Verify components of spark ignition system are installed and functioning properly.
- Verify that the blower rotates in the correct direction. If incorrect, have a qualified electrician rewire the blower to reverse its rotation.
- Verify all valves are installed in the proper location and correctly orientated relative to the gas or air flow direction.

Prepare for Start Up/Adjustment

After installation of the burner system components is complete, the following shall be followed to prepare for adjustment:

- Set the air flow switch so that is drops out at 20% below the maximum pressure of the combustion air blower.
- Set the low gas pressure switch at 20% below the gas pressure measured at the inlet to the main gas valve train.
- Set the high gas pressure switch at 20% above the gas pressure measured at the inlet to the main gas valve train.
- Close all the burner shut-off valves.
- Try to light a burner before the purge and other timing relays have finished their cycles. Verify that the flame monitoring system indicates a flame failure.
- Trip pressure switches and other limit interlocks. Verify that the main gas valve train closes.

DANGER: If simulated limits or simulated flame failures do not shut down the fuel system with the required failure response time, immediately correct the problem and retest before proceeding.

3. OPERATION

DANGER: The Phoenix SH burners are designed to mix fuel with air and burn the resulting mixture. All fuel burning devices can produce fires and explosions if improperly applied, installed, adjusted, controlled, or maintained. DO NOT bypass any safety feature; fire or explosion could result. Never try to light a burner if it shows signs of damage or malfunction.

Initial Setup

Upon adjustment of a Phoenix SH Burner for the first time, you must follow the steps listed below to ensure proper setup and operation. Each step listed are explained in full detail in the next sections.

- Reset the system
- Ignite the burner
- Set high fire fuel flow
- Set low fire fuel flow
- Stop Procedure.

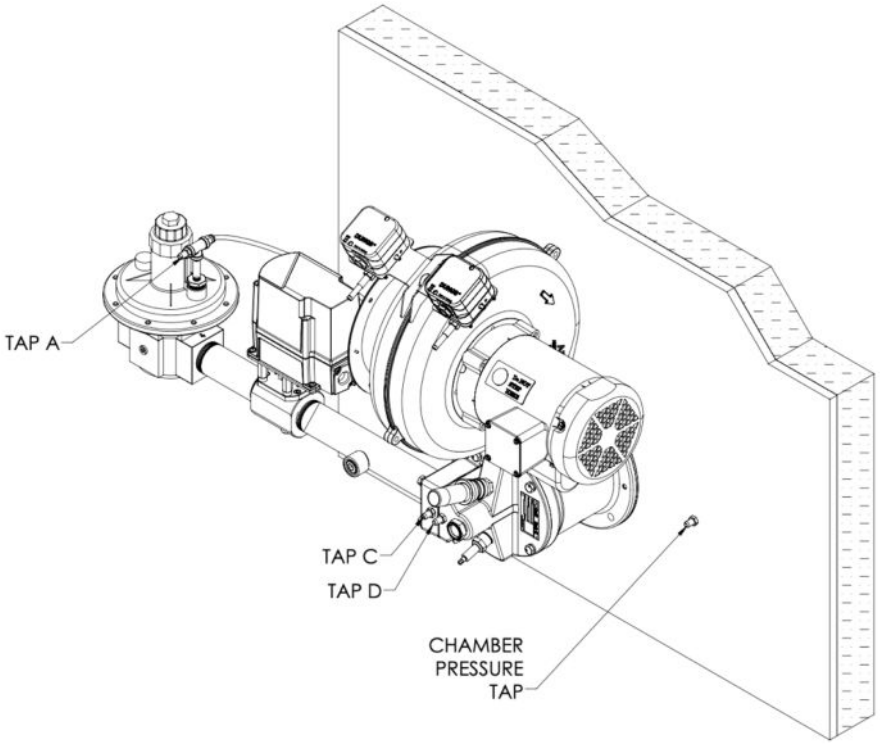

Figure 3.1 – Pressure Taps Locations

Step 1: Reset the system

- Close automatic and manual gas valves.
- Start combustion air blower.

CAUTION: If no ratio regulator is in included with the burner, ensure that during operation, the fuel pressure at the flow control valve does not exceed the value stated in the burner specification sheet, under "**Control Valve Inlet Pressure**".

Step 2: Ignite the burner

WARNING: This procedure assumes burner is installed with a flame monitoring control system and is serviceable. It also assumes normal low fire setpoint is being used, refer to the Phoenix SH specification sheet. If low fire gas is too low to be used for ignition consider increasing low fire.

- Make sure pressure taps C and D are open.
- Connect manometer to pressure taps C and D.
- Verify combustion air blower is running.
- Drive the gas control valve to low fire.
- Open all manual gas valves feeding the burner.
- Initiate the ignition sequence through the flame monitoring control system.
- Verify that the burner has ignited, through flame monitoring and visual observation (optional).

NOTE: If the burner does not ignite:

a) Try to ignite again after allowing flame monitoring control system to purge the air out of gas piping.
b) If the burner does not ignite after one or two additional attempts, see troubleshooting section of this document.

Step 3: Set the high fire fuel flow

1. If the burner has ignited, drive the main gas control valve to high fire.
2. Measure the gas differential pressure.
3. Adjust fuel control valve until gas differential pressure value aligns with high fire value in Phoenix SH specification sheet.

NOTE: The Phoenix SH gas orifice is sized to optimize performance for 10% excess air at high-fire.

4. Once chamber pressure and temperature conditions stabilize, repeat step 3.
5. Check the gas inlet pressure at the ratio regulator. This should be at or greater than pressure stated in the Phoenix SH specification sheet. It should not exceed the maximum pressure rating of the ratio regulator.
6. Remove manometer from pressure taps.
7. Close pressure taps.

DANGER: Insufficient gas inlet pressure may cause the ratio regulator to remain full open if there is a loss of air flow to the burner. This can cause excess fuel operation and the possible accumulations of unburned fuel in the chamber. In extreme cases, this may cause explosions or fires.

Step 4: Set the low fire fuel flow

- Drive the main gas control valve to low fire.
- Adjust the control valve in provided fuel piping to provide the desired low fire gas flow.

NOTE: Measuring low gas pressures at low fire can prove difficult, and it may be necessary to rely on visual inspection of the flame. This is especially true when gas turndowns greater than 10:1 are being used. The main intent is to provide a stable flame with good flame signal at a firing rate that will not cause the chamber temperature to overshoot.

Step 5: Stop Procedure

WARNING: Do not turn the combustion air blower off until the chamber temperature is below 250°F (121°C). This will prevent hot gases from back flowing into the burner and blower causing damage to the burner.

- Stop the burner through the burner control system.
- Run the combustion air blower until the chamber temperature drop below 250°F (121°C).
- Shut off the combustion air blower.
- Close all manual gas valves to the burner.

4. MAINTENANCE

Preventative maintenance is the key to a reliable, safe, and efficient system. The core of any preventive maintenance system is a list of periodic tasks. The following are suggestions for monthly and annual checks:

NOTE: The monthly and yearly lists are an average interval. In the case of a dirty environment, service interval may need to be shortened.

WARNING: Extreme caution must be taken due to the potential of flammable vapor being exposed to the atmosphere creating an ignition. Do do not operate any equipment that may create a spark during maintenance.

WARNING: High voltage ignition transformer can cause severe injury or death when handled incorrectly. Do not perform maintenance until power has been disconnected from ignition transformer.

Monthly Checklist (Optional)

- Leak test safety shut-off valves for tightness of closure.
- Test air pressure switch settings by checking switch movements against pressure settings and comparing with actual impulse pressure.
- Visually check ignition cable and connectors.
- Inspect impulse piping for leaks.
- Clean and inspect burners.
- Verify that the following components are not damaged or distorted:

    - Burner nozzle
    - Igniter
    - Flame supervision
    - Combustor
    - If applicable, remove and clean all the orifice plates.

Annual Checklist

- Inspect flame supervision devices for good condition and cleanliness.
- Check for proper inlet air/gas ratios.
- Test all the alarm systems for proper signals.
- Check igniters for proper gap.
- Check valve motors and control valves for free, smooth action and adjustment.
- Check for proper operation of ventilating equipment.
- Test the interlock sequence of all safety equipment; manually make each interlock fail, noting that related equipment closes or stops as specified by the manufacturer.
- Test the flame monitoring control system by manually shutting off gas to burner.
- Test main fuel hand-valves for operation.
- Clean or replace the combustion air blower filter (if used).

5. TROUBLESHOOTING

Troubleshooting Procedures

Potential Problem	Possible Cause	Proposed Solution
Cannot initiate Start-up sequence.	Air pressure switch has not made contact.	Check air pressure switch adjustment. Check blower rotation. Check loading line pressure at the ratio regulator.
	Malfunction of flame monitoring control system, such as shorted out flame sensor or electrical noise in sensor line.	Have a qualified electrician investigate and solve.
	Flame safety purge cycle not completed.	Check flame monitoring control system or purge timing.
	Main power is off.	Verify power to control system is on.
	No power to control unit.	Have qualified electrician investigate and solve.
	High gas pressure switch has activated.	Check incoming gas pressure. Adjust gas pressure if necessary. Check pressure switch setting and operation.
	Low gas pressure switch has activated.	Check incoming gas pressure. Adjust gas pressure if necessary. Check pressure switch setting and operation.
Start-up sequence runs but burner does not light.	Not enough gas: Air in the gas line.	Check output from flame safety. Open gas ball valve. Purge gas line.
	Not enough gas: Gas valve not open.	Check wiring to the automatic gas shut-off valve.
	Not enough gas: Gas solenoid valve does not open.	Check solenoid valve coil for proper orientation. Replace if needed.
	Not enough gas: Loading line to ratio regulator not attached.	Reconnect loading line and verify loading pressure.
	No ignition: The igniter is not correctly grounded to burner.	Clean the threads of the igniter and the burner. Do not apply grease to the thread of the spark plug.
	No ignition: The igniter is fouled.	Clean the igniter.
	No ignition: Open circuit between the ignition transformer and the igniter.	Repair or replace the wiring to the igniter.
	No ignition: There is no power to the ignition transformer.	Restore power to the ignition transformer.

Potential Problem	Possible Cause	Proposed Solution
Start-up sequence runs but burner does not light. (continued)	No ignition: Attempting to ignite at inputs greater than 40%.	Reduce start point gas flow. Verify control circuit.
	No ignition: Weak or non-existent spark.	Verify ignition transformer is a 6000 VAC transformer.
	No flame signal: Broken flame rod or dirty UV scanner lens.	Inspect and clean flame supervision. Replace if necessary.
	No flame signal: Flame rod grounding out.	Verify that the flame rod is installed correctly and is the correct length.
	Too much gas: Wrong or missing burner fuel orifice.	Check the Phoenix SH specification sheet for fuel orifice for given fuel.
The low fire flame is weak or unstable.	Low fire adjusted too low.	Increase low fire gas setting.
	Not enough gas.	Check start-up settings and adjust to increase low gas flow.
	Not enough air.	Check start-up settings. Check air plumbing, controls, and valves for leaks.
The burner turns off when cycling to high fire.	Fuel rich mixture.	Check start-up settings. Check air plumbing, controls, and valves.
	Loading line to the ratio regulator is leaking.	Repair the lead in the loading line.
The burner is unstable or produce soot and/or smoke.	The air/gas ratio is incorrect.	Measure all gas pressures and air pressures. Compare to initial start-up settings and adjust as necessary.
The burner is not performing as specified and does not respond to adjustment.	Weak flame signal.	Check condition of flame monitoring device.
	Internal damage to the burner. Parts loose or dirty within the burner.	Contact Algas-SDI.
Cannot achieve full burner capacity.	Air filter is blocked.	Clean or replace air filter.
	Increased furnace chamber pressures.	Re-check setup pressures and compare to specification sheet.
	Gas pressure is too low into the main gas pressure regulator.	Adjust gas pressure.
Air/gas leakage around burner	Insufficient seal around air/gas pipe connections	Reinstall connections with thread sealant applied. Soft set thread sealant for use in applications up to 500°F recommended.

6. SPARE PARTS

Spare Part List Models SH040

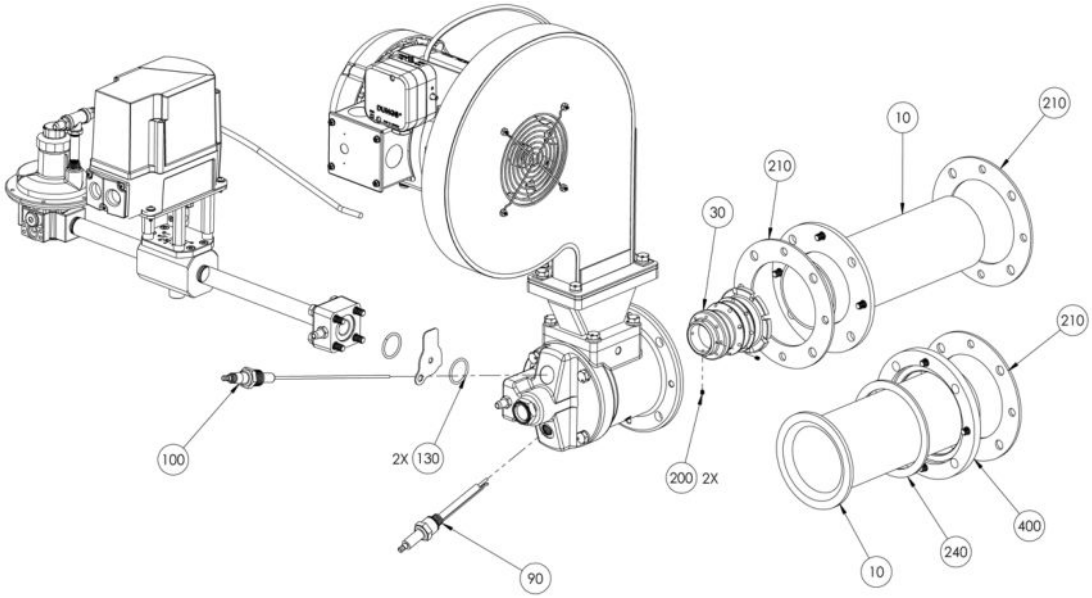

Item No	Description	Qty.	SH040
10	Combustor, Alloy, Straight	1	7001-4023
10	Combustor, Ceramic, Straight	1	7001-5122
30	Nozzle, Cast Iron[1]	1	7001-5110
90	Igniter	1	7001-9001
100	Flame Rod	1	7001-9015-2
130	O-ring	2	7001-9004
200	Nozzle Set Screw	2	7001-9047
210	Mounting Gasket	2	7001-5117
240	Ceramic Combustor Gasket	1	7001-5123
400	Ceramic Combustor Retaining Ring	1	7001-5076

[1] For use with all burners using alloy or ceramic combustors.

Spare Part List Model SH050 – SH075

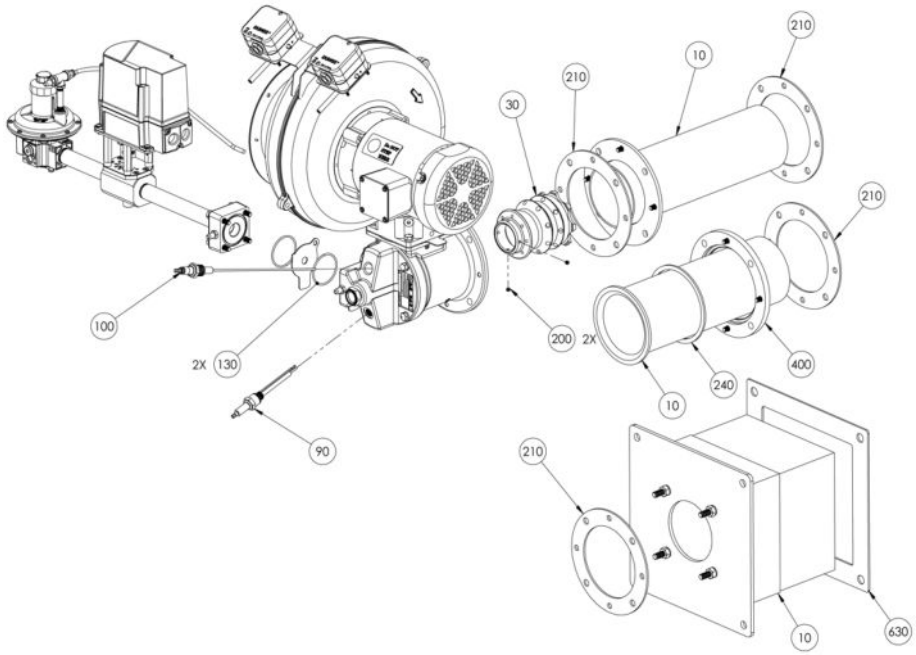

Item No	Description	Qty.	SH050	SH075
10	Combustor, Alloy, Straight	1	7001-4009	
10	Combustor, Alloy, Medium Velocity	1		7001-4010
10	Combustor, Ceramic, Straight	1	7001-5085	
10	Combustor, Ceramic, Medium Velocity	1		7001-5086
10	Combustor, Refractory, Straight	1	7001-5362	
10	Combustor, Refractory, Medium Velocity	1		7001-5360
30	Nozzle, Cast Iron[1]	1	7001-5023	7001-5066
30	Nozzles, Cast Iron, Flame Rod, Grounding[2]	1	7001-4044	7001-4045
90	Igniter	1	7001-9001	
100	Flame Rod	1	7001-9015-1	
130	O-ring	2	7001-9005	
200	Nozzle Set Screw	2	7001-9014	
210	Mounting Gasket	2	7001-5098	
240	Ceramic Combustor Gasket	1	7001-5093	
400	Ceramic Combustor Retaining Ring	1	7001-5077	
630	Refractory Combustor Gasket	1	7001-5391-01	

[1] For use with all burners using alloy or ceramic combustors using flame-rod or UV flame supervision.
[2] For use with burners using refractory combustors.

Spare Part List Models SH100 – SH200

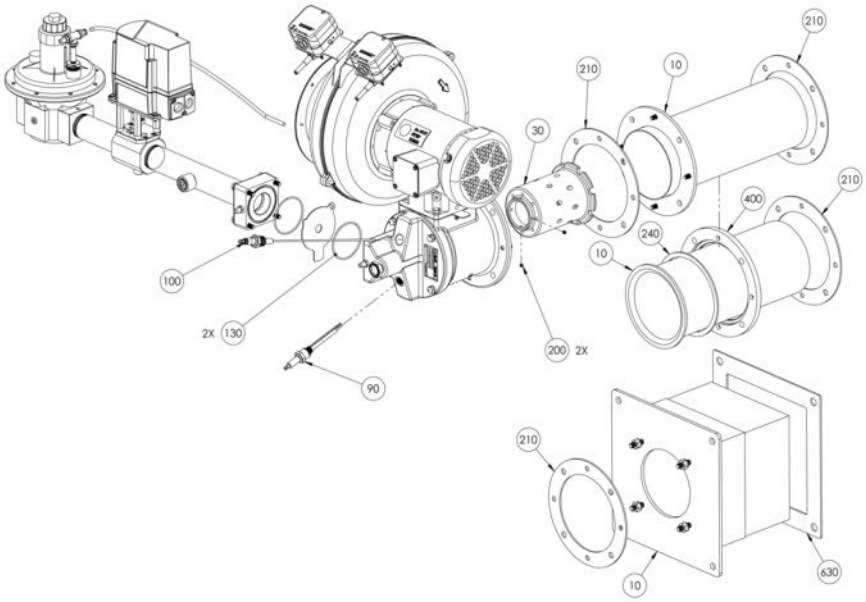

Item No	Description	Qty	SH100	SH150	SH200
10	Combustor, Alloy, Straight	1	7001-4008		
10	Combustor, Alloy, Medium Velocity	1	7001-4001		7001-4005
10	Combustor, Ceramic, Straight	1	7001-5084		
10	Combustor, Ceramic, Medium Velocity	1	7001-5035		7001-5082
10	Combustor, Refractory, Straight	1	7001-5355		7001-5356
10	Combustor, Refractory, Medium Velocity	1	7001-5349		7001-5353
30	Nozzle, Cast Iron[1]	1	7001-5005		
30	Nozzle, Cast Iron, Flame Rod[2]	1		7001-5256	
30	Nozzles, Cast Iron, Flame Rod, Grounding[3]	1	7001-4043	7001-4051	
90	Igniter	1	7001-9001		
100	Flame Rod	1	7001-9015		
130	O-ring	2	7001-9006		
200	Nozzle Set Screw	2	7001-9014		
210	Mounting Gasket	2	7001-5029		
240	Ceramic Combustor Gasket	1	7001-5037		
400	Ceramic Combustor Retaining Ring	1	7001-5036		
630	Refractory Combustor Gasket	1	7001-5391-01		

[1] For use with UV flame supervision on SH100, SH150, and SH200 or flame rod on SH100.
[2] For operation with flame-rod in combination with alloy and/or ceramic combustors on SH150.
[3] For use with burners using refractory combustors.

Spare Parts List Models SH300

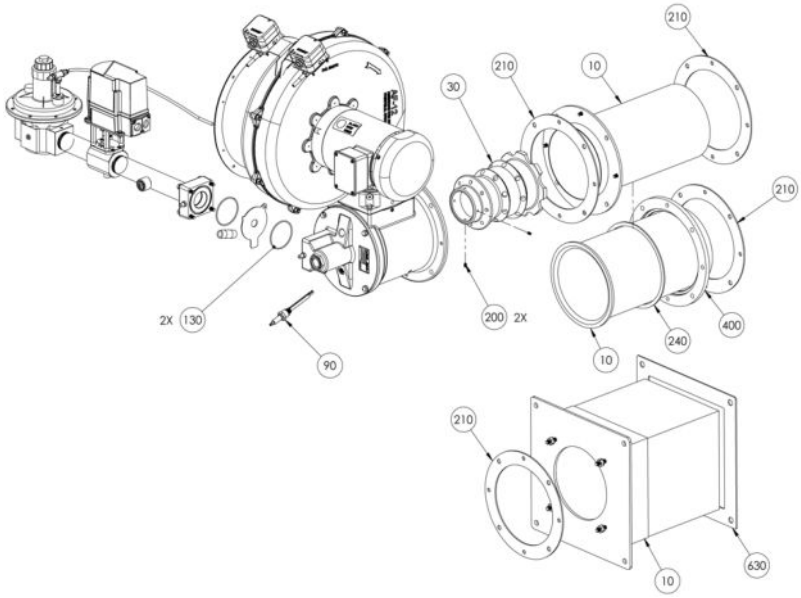

Item No	Description	Qty.	SH300
10	Combustor, Alloy, Straight	1	7001-4018
10	Combustor, Alloy, Medium Velocity	1	7001-4015
10	Combustor, Ceramic, Straight	1	7001-5091
10	Combustor, Ceramic, Medium Velocity	1	7001-5090
10	Combustor, Refractory, Medium Velocity	1	7001-5364
30	Nozzle, Cast Iron	1	7001-5043
90	Igniter	1	7001-9001
130	O-ring	2	7001-9006
200	Nozzle Set Screw	2	7001-9037
210	Mounting Gasket	2	7001-5072
240	Ceramic Combustor Gasket	1	7001-5094
400	Ceramic Combustor Retaining Ring	1	7001-5078
630	Refractory Combustor Gasket	1	7001-5391-03

Algas-SDI International, LLC
20224 66th Ave S.
Kent, Washington 98032
USA

Ph.: +1.206.789.5410
Fax.: +1.206.789.5414

www.algas-sdi.com